THIS DRAWING IS UNPUBLISHED. RELEASED FOR PUBLICATION .1997
© COPYRIGHT 1997 BY TYCO ELECTRONICS CORPORATION. ALL RIGHTS RESERVED.

LOC	DIST
A1	-

REVISIONS

P	LTR	DESCRIPTION	DATE	DWN	APVD
	A2	Released as per ECR-07-030422	17.12.07	SP	TS

PN 1-6

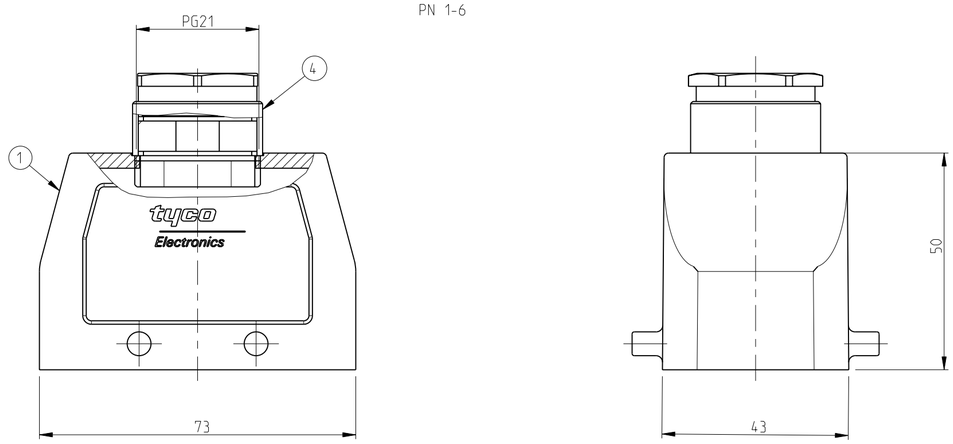

PN 2-6

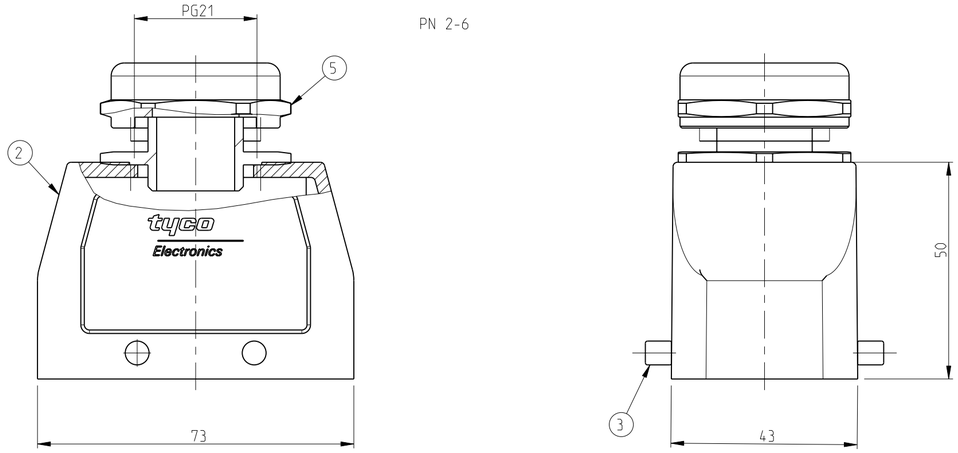

NOTES.

1 Material:Housing:Aluminium Diecasting Alloy

2 Surface-Powder Varnish Grey
-Aluminium Oxide +
Varnish Black

3 Varnish on the inside not necessary

4 Packaging
Quantity 5 Pieces in a box

PN 1-6

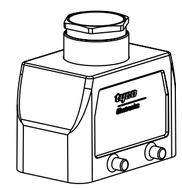

SCALE 1:2

PN 2-6

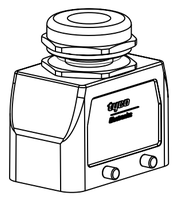

SCALE 1:2

2-6	1-6	DESCRIPTION	MATERIAL	SURFACE	COLOR	ITEM NO	DESCRIPTION
1	-	Gland fitting	Brass	Nickel plated	Blue	5	PG21
-	1	Cable connection round	Brass	Nickel plated	Blue	4	PG21
4	-	VS-Clip bolt	Stainless steel	Blank	-	3	-
1	-	Hood HB-K	Aluminium	Aluminium oxide	Black	2	-
-	1	Hood HB	Aluminium	-	Grey	1	-

ORDERING TEXT
HB.10.STO.1.21
HB-K.10.STO.1.21

THIS DRAWING IS A CONTROLLED DOCUMENT FOR TYCO ELECTRONICS CORPORATION IT IS SUBJECT TO CHANGE AND THE CONTROLLING ENGINEERING ORGANIZATION SHOULD BE CONTACTED FOR THE LATEST REVISION.

DIMENSIONS: mm

TOLERANCES UNLESS OTHERWISE SPECIFIED:
n.ISO 8015
n.ISO 2768-mH-E;
n.DIN 16901-120
0 PLC ±
1 PLC ±
2 PLC ±
3 PLC ±
4 PLC ±
ANGLES ±

MATERIAL

FINISH

DWN Schneider 09.12.02
CHK Schweiger 09.12.02
APVD –
PRODUCT SPEC –
APPLICATION SPEC –
WEIGHT –

Tyco Electronics
Tyco Electronics.AMP.GmbH
D-53819.Neunkirchen.Germany

NAME
Hood
HB.10.STO.1.21

SIZE	CAGE CODE	DRAWING NO	RESTRICTED TO
A2	00779	C-1102268	-

CUSTOMER DRAWING

SCALE 1:1 SHEET 1 OF 1 REV A2

AMP 1471-9 REV 31MAR2000

Pro/ENGINEER DRAWING