THIS DRAWING IS UNPUBLISHED. RELEASED FOR PUBLICATION 2006
© COPYRIGHT 2006 BY TYCO ELECTRONICS CORPORATION. ALL RIGHTS RESERVED.

LOC	DIST
A1	-

REVISIONS

P	LTR	DESCRIPTION	DATE	DWN	APVD
	B5	ECR-08-031071	27NOV2008	SR	BR

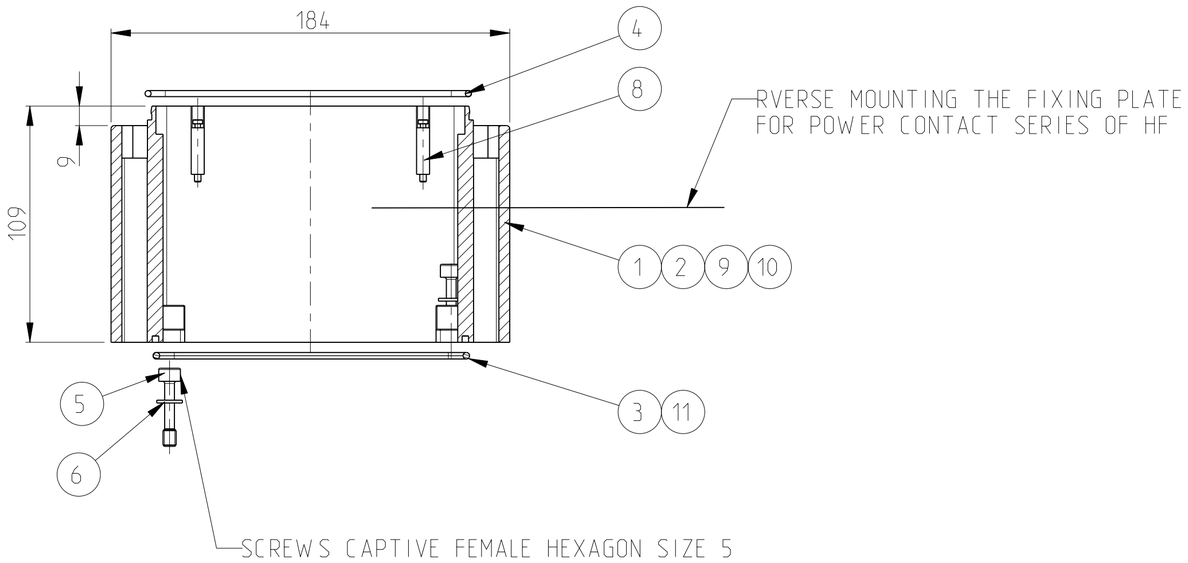

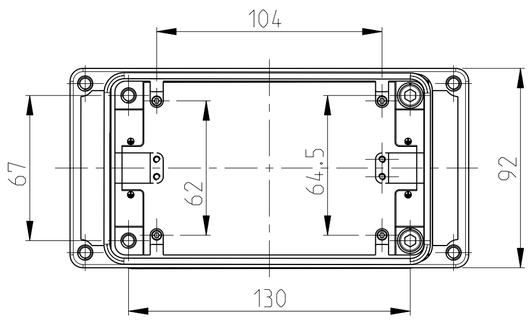

PN 0-4 ; 0-5
WITHOUT LOGO

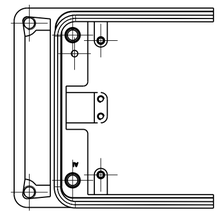

PN 0-1 ; 0-2
attachament landing

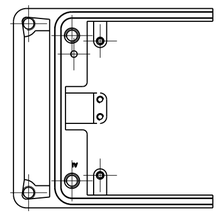

TORQUE
M3 - 1,5 Nm
M4 - 2,7 Nm
M5 - 5,4 Nm
M6 - 9,3 Nm

NOTES

1 PART SHALL BE FREE AND CLEAN OF BURRS AND OTHER FOREIGN MATERIAL

2 PACKAGING: QUANTITY 3 PIECES

3 VARNISHING INSIDE HOUSING NOT REQUIRED

PANEL CUTOUT

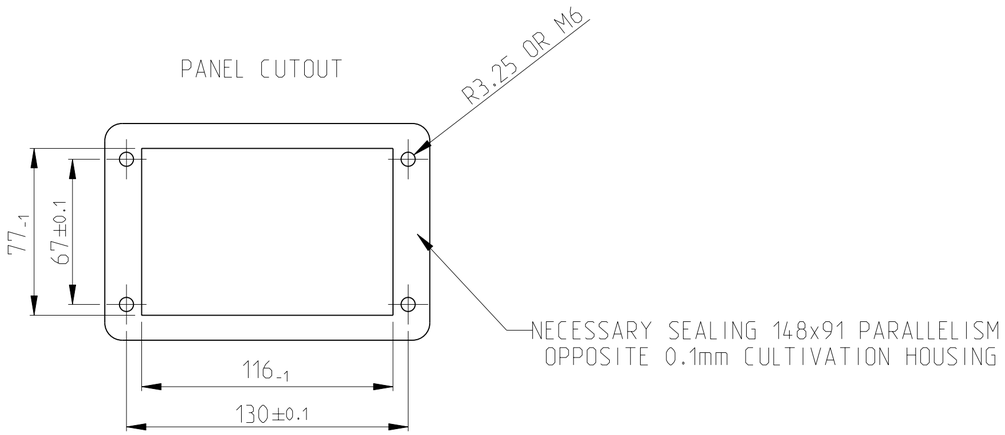

OBSOLETE

0-5	0-4	0-3	0-2	0-1	DESCRIPTION	MATERIAL	SURFACE	COLOR	ITEM	NOTES
	1			1	FLANGED SEAL	NEOPRENE		BLACK	11	
1					SURFACE MOUNTED HOUSING SIDE ENTRY	ALU	HART COAT	BLACK	10	
	1				SURFACE MOUNTED HOUSING SIDE ENTRY	ALU	YELLOW CHROMATES	BLACK	9	
			4	4	FIXING SCREW M3x27	V2A			8	MOUNTED
					~~FIXING SCREW~~	~~STEEL~~	~~ZINC PLATED~~		~~7~~	~~MOUNTED~~
4	4		4	4	SPRING RING	V2A			6	MOUNTED
4	4		4	4	SCREW M6x30	V2A			5	MOUNTED
1	1		1	1	PROFIL SEAL	NEOPRENE		BLACK	4	MOUNTED
1			1		FLANGED SEAL	NEOPRENE		BLACK	3	MOUNTED
			1		SURFACE MOUNTED HOUSING SIDE ENTRY	ALU	HART COAT	BLACK	2	
				1	SURFACE MOUNTED HOUSING SIDE ENTRY	ALU	YELLOW CHROMATES	BLACK	1	

HF-EMV-K.AG.12
~~HF-HIP-K.AG.12~~
SET-HF-EMV-K.AG.12
HF-EMV-K.AG.12
HF-HIP-K.AG.12

THIS DRAWING IS A CONTROLLED DOCUMENT FOR TYCO ELECTRONICS CORPORATION. IT IS SUBJECT TO CHANGE AND THE CONTROLLING ENGINEERING ORGANIZATION SHOULD BE CONTACTED FOR THE LATEST REVISION.

DIMENSIONS: mm

TOLERANCES UNLESS OTHERWISE SPECIFIED:
0 PLC ±-
1 PLC ±-
2 PLC ±-
3 PLC ±-
4 PLC ±-
ANGLES ±1°

MATERIAL -

FINISH -

DWN 27NOV2008 R.SCHNEIDER
CHK 27NOV2008 T.SCHNURPFEIL
APVD -
PRODUCT SPEC -
APPLICATION SPEC -
WEIGHT -

Tyco Electronics
tyco Electronics AMP GmbH
53757 Sankt Augustin (Germany)

NAME
SURFACE MOUNTED HOUSING
SIZE 12 SERIES HF
1102192

SIZE	CAGE CODE	DRAWING NO	RESTRICTED TO
A2	00779	C-1102192	-

CUSTOMER DRAWING | SCALE 0:5 | SHEET 1 OF 1 | REV B5

AMP 1471-9 REV 31MAR2000

Pro/ENGINEER DRAWING