Product Number: 6401-0-15-01-47-27-04-0

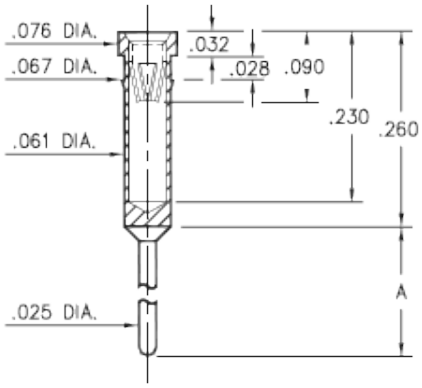

Basic Part Number	Length A
0401-0	.340
6401-0	.540

X401-0-15-XX-47-XX-04-0
Press-fit in .064 mounting hole

Description:

6401 - Receptacle With A Standard Tail Accepts .025-.037 .025 sq post diameter leads.

Packaging:

Packaged in Bulk

Mill-Max Part Number	Shell Plating	Contact Plating	RoHS Compliant
6401-0-15-01-47-27-04-0	200 - 300 µ" Tin/Lead over Nickel	30 µ" Gold over Nickel	NO

CONTACT:

Contact Used: #47, Standard 6 Finger Contact

Current Rating = 4.5 Amps

BERYLLIUM COPPER ALLOY 172 (UNS C17200) per ASTM B 194

Properties of BERYLLIUM COPPER:

- Chemical composition: Cu 98.1%, Be 1.9%
- Temper as stamped: TD01

Properties after heat treatment (TH01):

- Hardness: 36-43 Rockwell C
- Mechanical Life: 100 Cycles Min.
- Density: .298 lbs/in3
- Electrical Conductivity: 22% IACS*
- Resistance: 10 miliohms Max
- Operating Temperature: -55°C/+125°C
- Melting point: 980°C/865°C (liquidus/solidus)
- Stress Relaxation†: 96% of stress remains after 1,000 hours @ 100 °C ; 70% of stress remains after 1,000 hours @ 200 °C

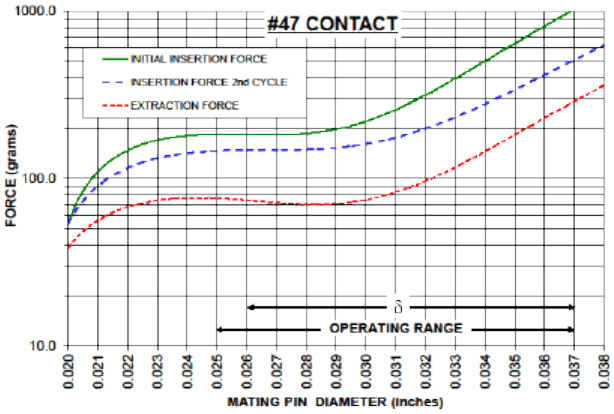

The insertion/extraction/normal force characteristics above were derived using 30 microinch gold plated contact and polished steel gauge pins having a bullet-shaped tip.

The curves represent typical average values; they are best used to compare the differences between similar size contacts and to guide you in selecting one that is suitable for your application. Your results may vary, so for your specification, we encourage you to obtain complimentary samples for your evaluation.

*International Annealed Copper Standard, i.e. as a % of pure copper.

†Since BeCu loses its spring properties over time at high temperatures; it is rated for continuous use up to 150°C. For applications up to 300°C, Mill-Max offers many contacts in Beryllium Nickel. Contact Tech Support for more info.

SHELL MATERIAL:

BRASS ALLOY (UNS C36000) per ASTM B 16
Note: Swage Pins are Annealed

Properties of BRASS ALLOY:

- Chemical composition: Cu 61.5%, Zn 35.4%, Pb 3.1%†
- Hardness as machined: 80-90 Rockwell B
- Density: .307 lbs/in3
- Electrical conductivity: 26% IACS*
- Melting point: 900°C/885°C (liquidus/solidus)

†(3 to 4% lead is used to permit "free machining" and is permitted by EC Directive 2002/95Annex 6; so all pin materials are RoHS compliant)

*International Annealed Copper Standard, i.e. as a % of pure copper.

Certificate of Compliance:

This is to Certify that the product described above is manufactured to Mill-Max quality standards in accordance with all applicable specifications and drawing. Mill-Max certifies this product to be free from defects of materials and workmanship.

This Certificate of Compliance covers the following requirements:

- Dimensional (all features verified to be within tolerances described on the applicable drawing).
- Raw Material (materials and properties verified to be as described on the applicable drawing).
- Plating (platings as required, thickness verified, and performance including solderability per mil-standard).
- Performance (insertion extraction or other force requirements as described on the applicable drawing).

Compliance Statement for Registration, Evaluation, Authorization and Restriction of Chemicals (REACH)

Reference:

1. Regulation EC No 1907/2006 of the European Parliament and of the Council of 18 December 2006, concerning the Registration, Evaluation, Authorization and Restriction of Chemicals (REACH)

2. ECHA, Candidate list of Substances of Very High Concern (SVHC) http://echa.europa.eu/reach_en.asp

Mill-Max is aware of the regulation and the SVHC list the EU published (referenced above). Mill-Max does not produce or sell any of the listed substances in their homogeneous form. These substances are not intentionally added during the manufacturing of any Mill-Max products. To our knowledge, our products do not contain the substances described on the ECHA SVHC list. Testing is not performed for materials and substances that were not intentionally added. No warranty, liability of indemnification is expressed or implied with this information. Mill-Max maintains surveillance of the ECHA website to obtain the latest information and periodically reviews the SVHC list for changes and additions.

Compliance Statement for DRC Conflict Free products.

Reference:

Dodd-Frank Wall Street Reform and Consumer Protection Act, Section 1502, reporting requirements for users of conflict minerals.

"Conflict minerals," are Columbite-tantalite (coltan), cassiterite, gold, wolframite, or their derivatives; or any other mineral or its derivatives determined by the Secretary of State to be financing conflict in the Democratic Republic of the Congo (DRC) or an adjoining country. Metals derived from these minerals are tin, tantalum, tungsten, and gold. By this definition, the only minerals of concern that may be found in Mill-Max products are tin and gold.

Mill-Max Mfg.Corp. hereby certifies that its products are manufactured with tin and gold that is derived from material that is considered DRC Conflict Free. Mill-Max provides this assurance as a result of a due diligence process that includes traceability to the source and in some cases the identification of recycled and scrap materials included in the subject material.