THIS DRAWING IS UNPUBLISHED. RELEASED FOR PUBLICATION 20
© COPYRIGHT 20 BY - ALL RIGHTS RESERVED.

LOC	DIST
-	-

REVISIONS

P	LTR	DESCRIPTION	DATE	DWN	APVD
	A	REVISED PER ECO-12-020777	29NOV2012	KH	MB

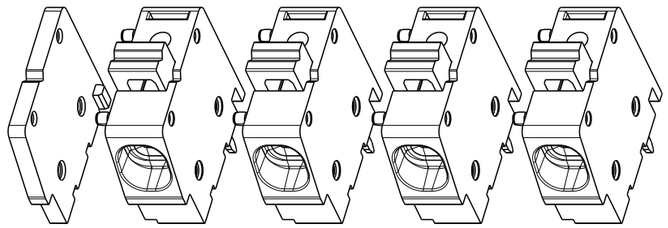

SCALE 2:1
-4 AS SHOWN

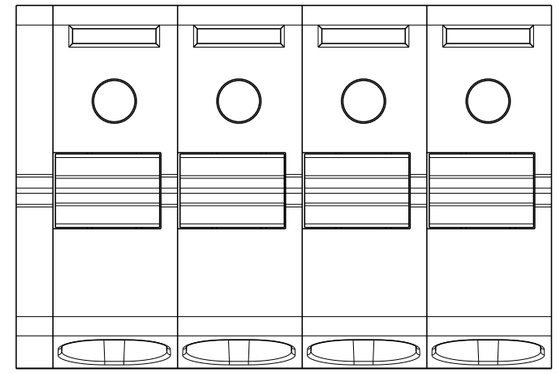

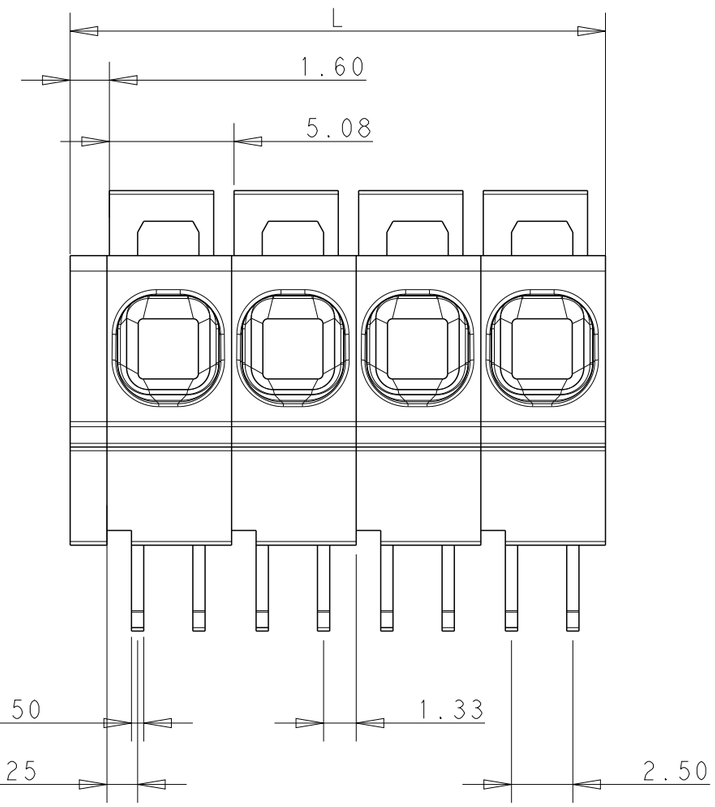

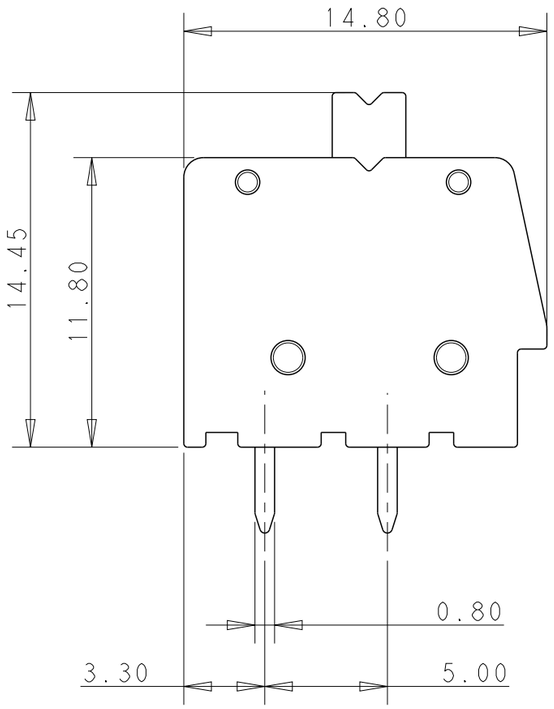

PCB LAYOUT FOR-4
AS SHOWN

1 MATERIALS:
HOUSING - POLYAMIDE, COLOR-GREEN
CLAMPING SPRING - STEEL
PIN - COPPER ALLOY - TIN PLATED

2 MECHANICAL
PCB THICKNESS - 2.40 MAX
PCB HOLE DIAMETER - 1.20 MIN
STRIP LENGTH - 10-11 MM
OPERATING TEMPERATURE - -40°C TO +110°C

3 ELECTRICAL
CURRENT RATING- 15 AMP FOR 12 GAGE WIRE.
VOLTAGE RATING- 300 VOLTS

DIM "L"	POLE	PART NO
62.46	12	1-1986775-2
57.38	11	1-1986775-1
52.30	10	1-1986775-0
47.22	9	1986775-9
42.14	8	1986775-8
37.06	7	1986775-7
31.98	6	1986775-6
26.90	5	1986775-5
21.82	4	1986775-4
16.74	3	1986775-3
11.66	2	1986775-2

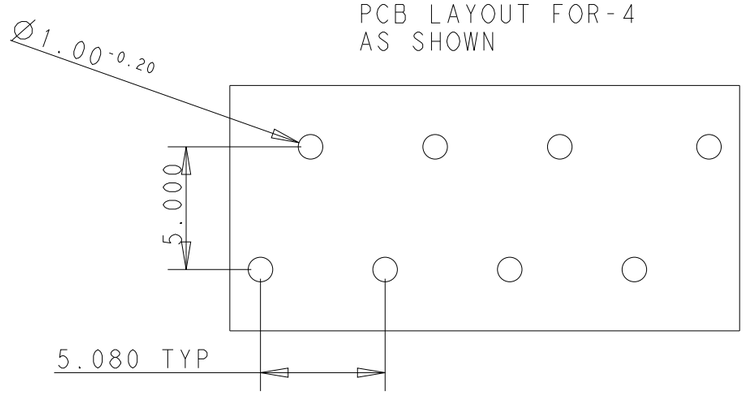

THIS DRAWING IS A CONTROLLED DOCUMENT.

DIMENSIONS: mm

TOLERANCES UNLESS OTHERWISE SPECIFIED:
0 PLC ±-
1 PLC ±0.5
2 PLC ±0.25
3 PLC ±-
4 PLC ±-
ANGLES ±1°

MATERIAL -
FINISH -

DWN KIRAN HOLAL 12OCT2012
CHK MARK BRUBAKER 12OCT2012
APVD MARK BRUBAKER 12OCT2012
PRODUCT SPEC -
APPLICATION SPEC -
WEIGHT -

TE Connectivity

NAME
SPRING TYPE, SIDE WIRE ENTRY TERMINAL BLOCK
SIDE STACKABLE 02-25 POLES PITCH 5.08MM
-

SIZE	CAGE CODE	DRAWING NO	RESTRICTED TO
A3	00779	C-1986775	-

Customer Drawing | SCALE 1:4 | SHEET 1 OF 1 | REV A

1470-19 (3/11)