NOTES:

1. ELECTRICAL SPECIFICATIONS:
   CENTER FREQUENCY: 1592 MHz
   FREQUENCY TOLERANCE: +/−25 MHz
   3:1 VSWR B.W. = 175 MHz
   MIN GAIN @ C.F. = 4 dBic
   HALF POWER BEAMWIDTH:
   110° SOLID ANGLE
   EFFICIENCY: 60% TYPICAL
   VSWR @ C.F. = ≤ 1.8:1
   AXIAL RATIO: 6 dB
   RIGHT HAND CIRCULAR POLARIZATION
   Z_{IN} = 50 OHMS
2. SPECIFICATIONS ARE FOR UNPACKAGED ANTENNA.
3. FOOTPRINT AND ELECTRICAL SPECIFICATIONS ARE SUBJECT TO CHANGE. CONSULT SPECTRUM CONTROL FOR SPECIFIC APPLICATIONS.
4. TESTING TO BE PERFORMED ON AN ALUMINUM GROUND PLANE, 63mm (2.480 IN) X 63mm (2.480 IN) SQUARE, IN FREE SPACE.

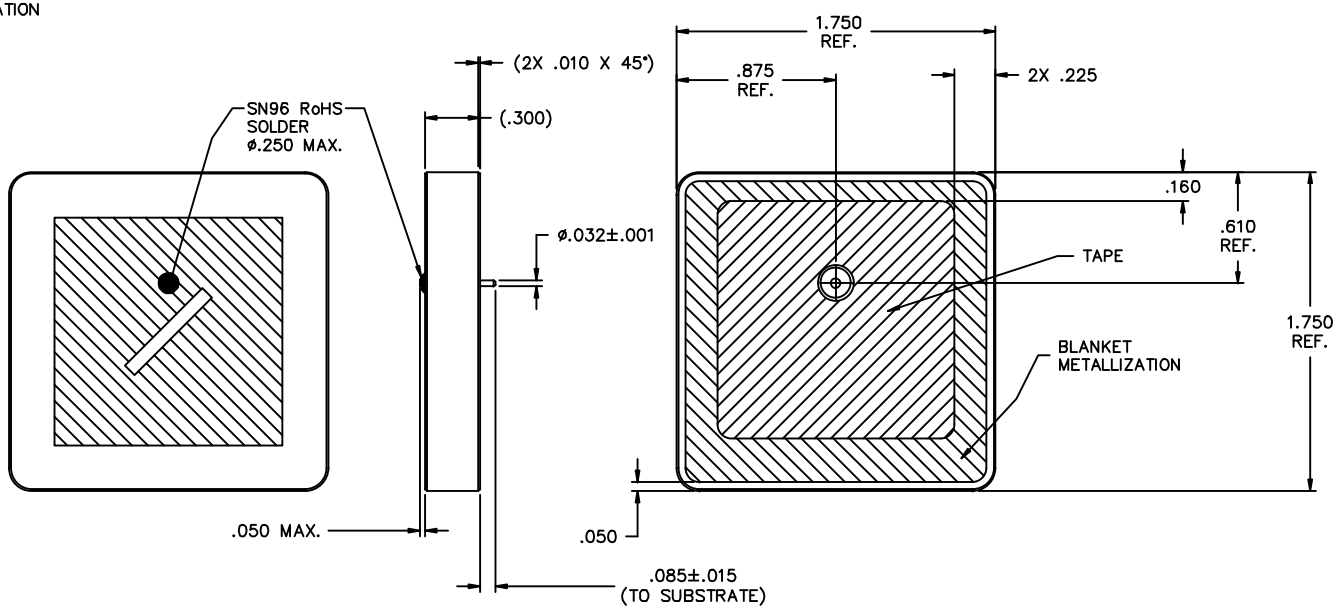

RoHS COMPLIANT

00	REV. NO.	UNLESS OTHERWISE SPECIFIED DIMENSIONS ARE IN INCHES. DO NOT SCALE.	TOLERANCES UNLESS OTHERWISE SPECIFIED Fractions ± 1/64 Dec. .xx± .01 Dec. .xxx± .005 Angles ±0° 30′	SPECTRUM CONTROL INC.	FAIRVIEW PENNSYLVANIA
CN 30799-CPD	CHANGE NOTICE	THIRD ANGLE	CODE IDENT. NO. OLSP2	Dwn. KAUFFMAN DATE 9-25-06 Engr. C.KIRETA Sheet 1 of 1	Description SALES DRAWING PA451592175SALF

Quality Products From The Specialists In Electro-Magnetic Compatibility