Alle Rechte vorbehalten/ *All rights reserved*

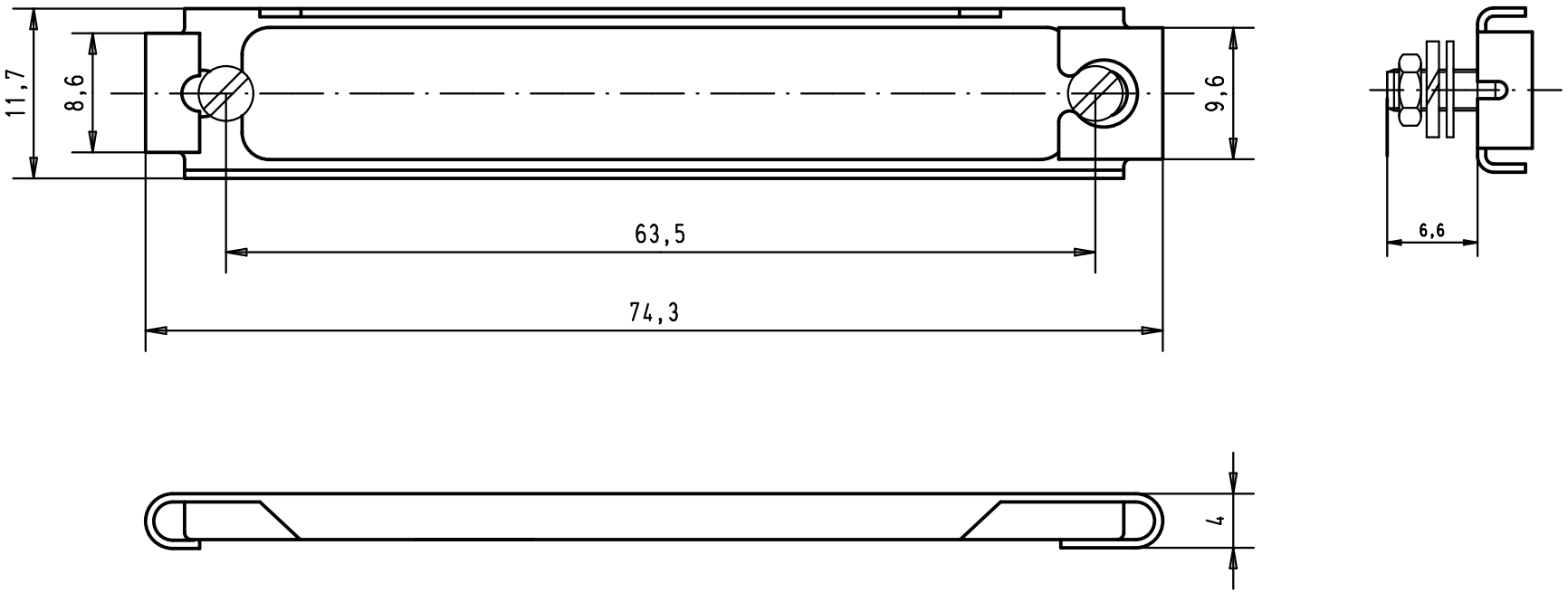

							Dat.	Name	All Dim. in mm Orig. Size DIN A 4	Slide locking device 37 poles corrosion resistant steel	Maßstab/ *Scale* 2:1
						Detail.	28-MAR-02	CV			
						Insp.					
						Stand.					
			36220	22-NOV-10	SC	HARTING EURL F-95972 Paris				TB 09 67 000 9917	Blatt/ *Page* 1/1
09 67 000 9917			29760	28-MAR-02	CV					Sub.	
Part number			Mod.	Dat.	Name						