REVISIONS					
ZONE	LTR	DESCRIPTION	DATE	ENG	APPROVED
	B1	Update Per ECO-11-016360	8/10/11	PJS	CEP
	B2	UPDATE PER ECO-11-006614	2/19/13	CEP	CEP

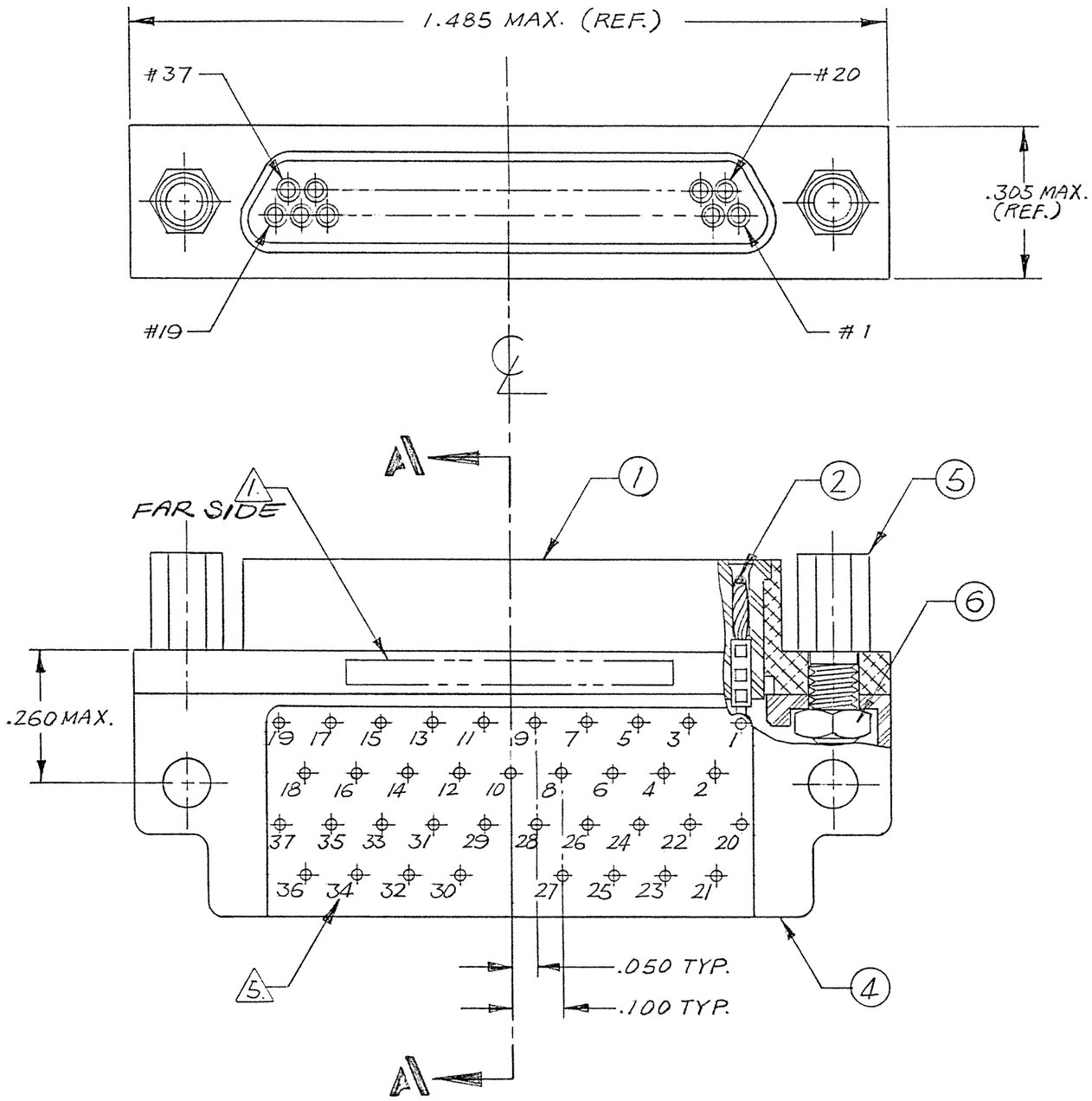

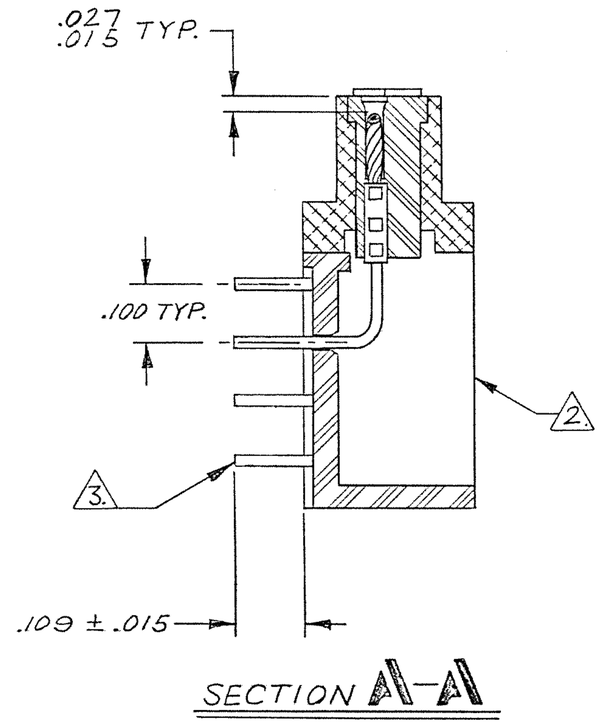

NOTES : UNLESS OTHERWISE SPECIFIED.

1. MARKING: MARK OPPOSITE SIDE PER MEP203-12

2. ASSEMBLE ALL ITEMS (ITEM #1 THRU #6), THEN FILL WITH EPOXY AROUND HEX NUT & T.B. BLOCK BACKPOTTING AS SHOWN. USE EPOXY PER TPD.

3. TERMINAL WIRES TO BE SOLDER COATED .003 MAX. (PER SIDE) UP TO THE MOUNTING SURFACE, AT A MINIMUM. SOLDER TO BE QQ-S-571, TYPE Sn63, FLUX PER MIL-F-14256, TYPE A.

4. CRIMP LEADS INTO CONTACTS PER MEP 302-05.

5. TERMINAL IDENT NOS AS SHOWN (VIEWED FROM THE MOUNTING SURFACE) DO NOT ACTUALLY APPEAR ON THE PART (FOR IDENTIFICATION ONLY)

QTY REQD	CODE IDENT	PART OR IDENTIFYING NO.	NOMENCLATURE OR DESCRIPTION

PARTS LIST

NEXT ASSY	USED ON
APPLICATION	

UNLESS OTHERWISE SPECIFIED DIMENSIONS ARE IN INCHES TOLERANCES ARE:
FRACTIONS ± DECIMALS .XX ± .XXX ± .005 ANGLES ±

MATERIAL

FINISH

DO NOT SCALE DRAWING

CONTRACT NO.

APPROVALS	DATE
DRAWN YONG CHU	3/7/84
CHECKED	4/11/84
PR. ENG.	4-13-84
APPD.	

These drawings and specifications are the property of Microdot Inc., are issued in strict confidence and shall not be divulged, be reproduced or copied, or used as the basis for the manufacture or sale of any article without written permission of Microdot Inc.

TE Connectivity

METAL SHELL 90° LO-PROFILE CONNECTOR (MIL-C-83513/) MCK- ** - P - 37 L(P) RT1 (W/ JACKPOST), 094-4604-7000

PROD. CODE 845

CODE M

SIZE	CODE IDENT NO.	DRAWING NO.
C	98278	1532142-3

SCALE ~ SHEET / OF /