Alle Rechte vorbehalten/ *All rights reserved*

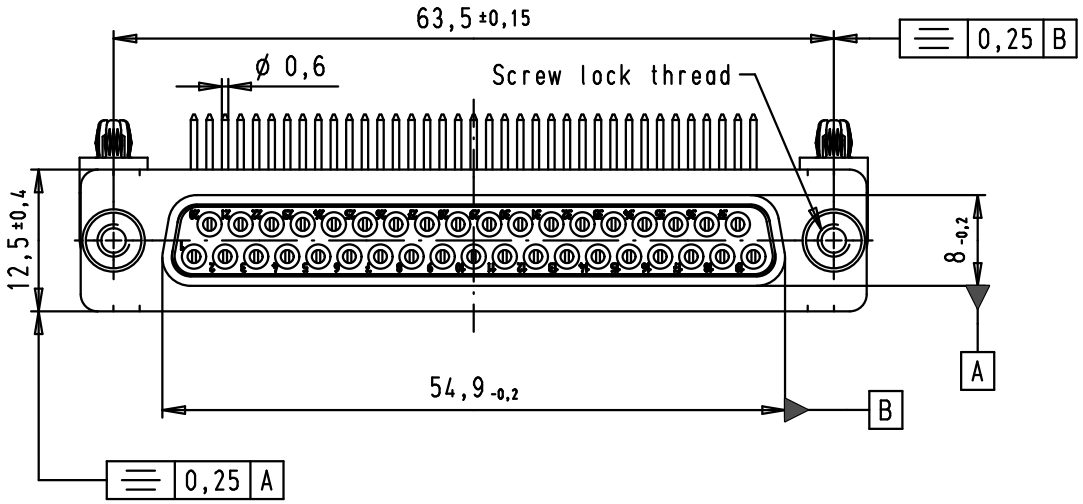

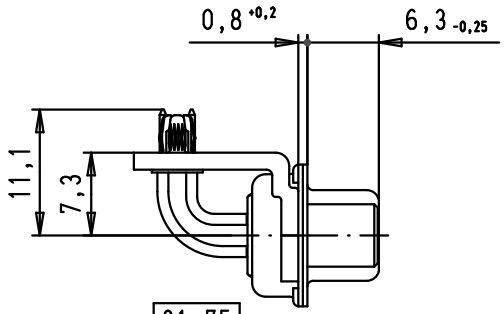

SPECIFICATIONS

Mating cycles	500
Filter type	C
Capacitance	3900 pF±20%
Working voltage	100 V
Current rating	7,5 A
Insulation resistance	>1 GΩ

FREQUENCY (MHz)	ATTENUATION (dB)
5	6
10	11
50	25
100	35
500	35
1000	32

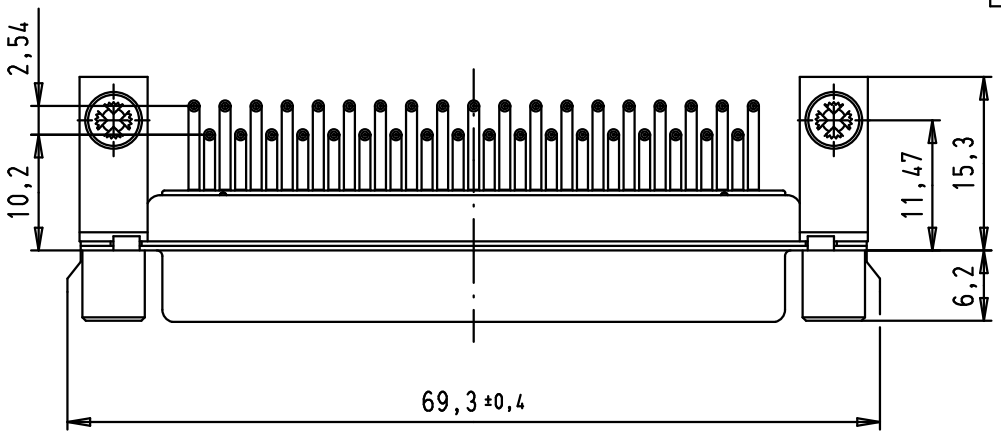

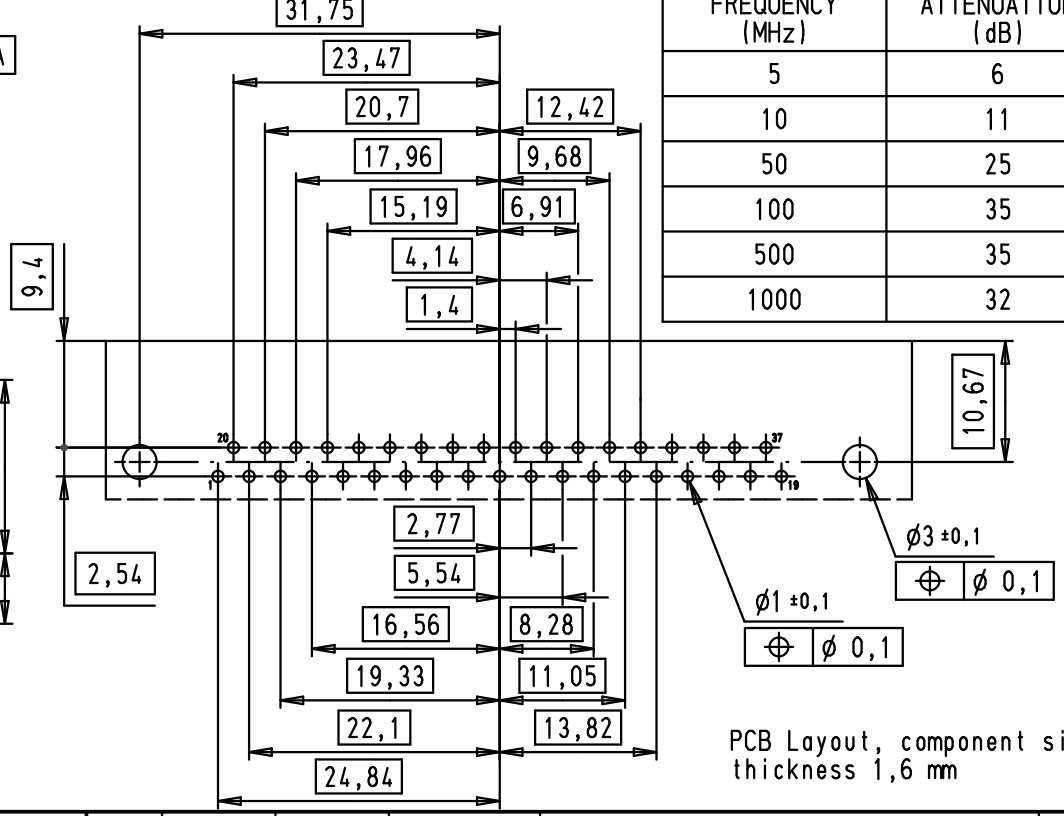

PCB Layout, component side, thickness 1,6 mm

09 64 414 7245	M3
09 64 414 7244	4-40 UNC-2B
Part number	Screw lock thread

Mod.	Dat.	Name
35300	01/12/08	PK
33800	16/08/06	PK
32236	13/10/04	TR
31058	08/07/02	CV

	Dat.	Name
Detail.	08/07/02	CV
Insp.		
Stand.		

All Dim. in mm
Orig. Size DIN A 4

HARTING EURL
F-95972 Paris

D-Sub, female, angled, 37 poles, turned solder pins, screw locks and brackets with board locks

Maßstab/ *Scale* 1,5:1

TB 09 64 414 724X

Sub.

Blatt/ *Page* 2/4