SIGN	DATE	DESCRIPTION	APPROVER
1	2009.12.28	Add UL standard	Jacke
2	2010.05.24	The design is changed	Jacke

THIS IS CAD DRAWING, DO NOT REVISE MANUALLY!!!

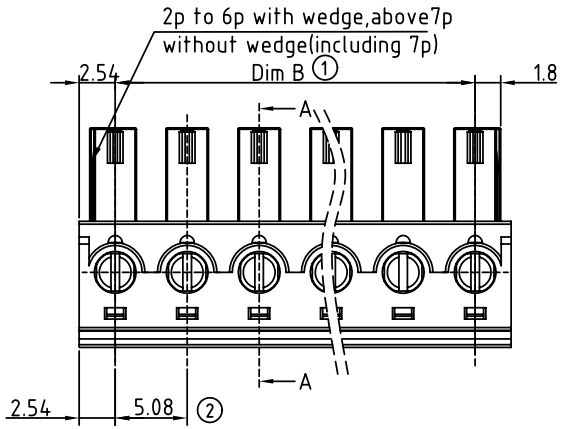

Poles	02	03	04	05	06	07	08	09
Dim A	10.16	15.24	20.32	25.4	30.48	35.56	40.64	45.72
Dim B	5.08	10.16	15.24	20.32	25.4	30.48	35.56	40.64
TOL	±0.15				±0.20			
Poles	10	11	12	13	14	15	16	17
Dim L	50.8	55.88	60.96	66.04	71.12	76.2	81.28	86.36
Dim B	45.72	50.8	55.88	60.96	66.04	71.12	76.2	81.28
TOL	±0.30				±0.35			
Poles	18	19	20	21	22	23	24	
Dim L	91.44	96.52	101.6	106.68	111.76	116.84	121.92	
Dim B	86.36	91.44	96.52	101.6	106.68	111.76	116.84	
TOL	±0.40							

Material

- Item ⓐ Insulating body:Thermoplastic (UL94V-0)
- Item ⓑ Insulating cover:Thermoplastic (UL94V-0)
- Item ⓒ Contant:Brass, Tin plated
- Item ⓓ Wire guard: PhBz ,Tin plated
- Item ⓔ Terminal screw :Steel Cr3+ Zinc plating "-" slot type

Electrical

- Voltage rating: 300VAC
- Current rating: 10A
- Wire range:
- Solid wire(AWG): 14-30
- Stranded wire(AWG): 14-30
- Torque(Lb-In): 2
- Screw: M2
- Wire strip length: 7-8mm
- Withstanding Voltage: 1.6KV
- Operating temperature: -40°C to +115°C
- Soldering temperature: 250°C±10°C/5 Sec
- ⚠1 Safety Approval: c UL us

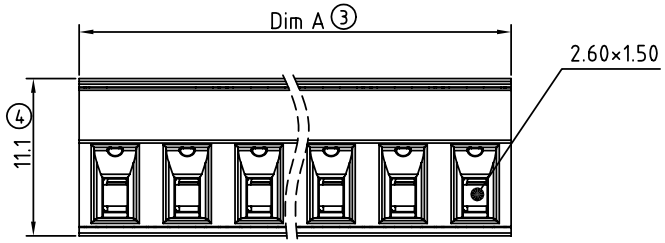

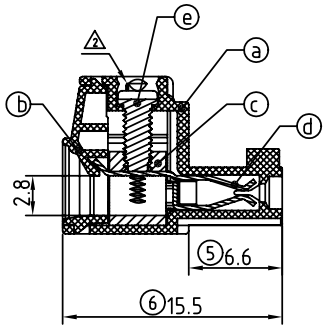

SECTION A-A

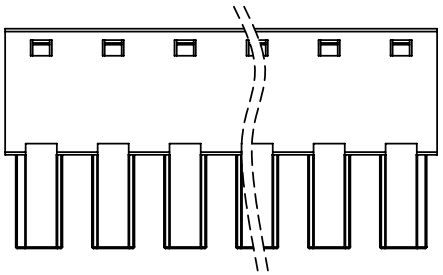

VR xx 51x 0 xxxx G

02 2 CONTACTS	0 Black (RAL9005)	0000 Standard @ Logo	RoHS
03 3 CONTACTS	2 Red (RAL3001/D)	000A Standard ANY Logo	Pb<40,000ppm
... ...	3 Orange(RAL2011/P)	Any special item by	
24 24 CONTACTS	4 Yellow(RAL1018/A)	customer request,	
	5 Green(RAL6018/T)	please contact sales	
	6 Blue (RAL5015/A)	department.	
	8 Grey(RAL7035/D)		

ANYTEK

CUSTOMER COPY

ALL RIGHTS RESERVED. REPRODUCTION OR ISSUE TO THIRD PARTIES IN ANY FORM WHATEVER IS NOT PERMITTED WITHOUT WRITTEN AUTHORITY FROM THE PROPRIETOR. PROPERTY OF ANYTEK TECHNOLOGY CO., LTD

TITLE	VR 5.08 Series W/o flange (Contact on down side)					
PART NO.	VRxx51x0xxxG			DWG NO.	8VR0001	
APPROVED	CHECKED	DESIGNED	DRAWN	CUST NO.		Tolerance
		Jacke 2010.05.24	Jacke 2010.05.24		UNIT: mm	X. ±0.50
					SCALE: NONE	X.X ±0.30
				SHEET: 01/01	REV.: D	X.XX ±0.10
						X° ±1°