SIGN	DATE	DESCRIPTION	APPROVER
1	8/20'09	The dimension changed from 25.4 to A.	Kind
2	10/26'10	Stranded Wire changed from 16-28 AWG to 16- 26 AWG.	Tason
3	10/26'10	Solid wire changed from 16-28 AWG to 16- 26 AWG.	Tason
4	02/21'11	Add the "cULus" Safety Approval	Tason
5	02/23'11	The Torque changed from 1.7 Lb-In to 2 Lb-In	Tason
THIS IS CAD DRAWING, DO NOT REVISE MANUALLY!!!			

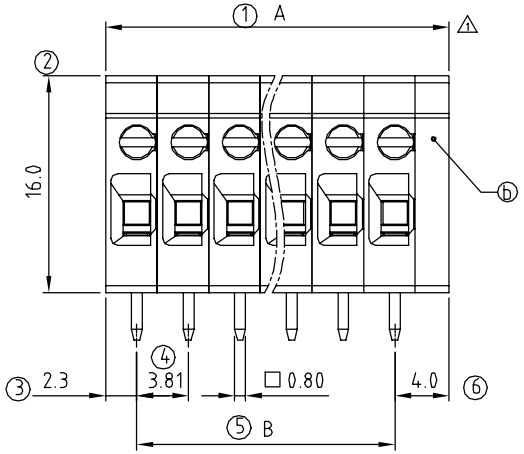

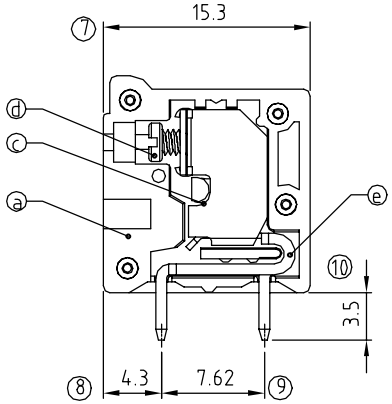

Material:

- Item ⓐ Terminal housing: Thermoplastic (UL94V-0)
- Item ⓑ Terminal cover: Thermoplastic (UL94V-0)
- Item ⓒ Metal housing: Steel , Zinc plated
- Item ⓓ Terminal screw: Steel Zinc plating "-" slot type.
- Item ⓔ Solder pin: Brass,Tin plated.

Electrical:	cULus
Voltage rating:	300V
Current rating:	8A
Wire range:	
3 Solid wire(AWG):	16-26
2 Stranded wire(AWG):	16-26
Torque:	2 Lb-In.
Screw:	M2
Wire strip length:	8-9mm
Withstanding Voltage:	1.6KV
Operating temperature:	-40°C to +115°C
Soldering temperature:	250°C±10°C/5 Sec
4 SAFETY APPROVOL DETA:	c UL us

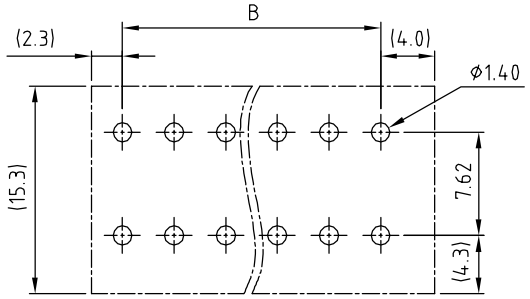

PCB Layout

TR xx 3 5 x 1 xxxx G

- No. OF POLES: 02: 2 POLES ⋮ 24: 24 POLES
- COLOR: 0: BLACK; 5: GREEN (RAL 6018/T); 6: BLUE; 8: GREY (RAL 7004/P)
- 0000: "@" Logo (Standard); 000A: "ANYTEK" Mark
- G: Pb<40000ppm

Any special item by customer requst. please contact sales department.

POLE		2	3	4	5	6	7	8	9	10	11	12
A		10.12	13.93	17.74	21.55	25.36	29.17	32.98	36.79	40.60	44.41	48.22
B		3.81	7.62	11.43	15.24	19.05	22.86	26.67	30.48	34.29	38.10	41.91
Tol.		±0.10					±0.15					
POLE	13	14	15	16	17	18	19	20	21	22	23	24
A	52.03	55.84	59.65	63.46	67.27	71.08	74.89	78.70	82.51	86.32	90.13	93.94
B	45.72	49.53	53.34	57.15	60.96	64.77	68.58	72.39	76.20	80.01	83.82	87.63
Tol.		±0.20					±0.30					

ANYTEK

CUSTOMER COPY

ALL RIGHTS RESERVED. REPRODUCTION OR ISSUE TO THIRD PARTIES IN ANY FORM WHATEVER IS NOT PERMITTED WITHOUT WRITTEN AUTHORITY FROM THE PROPRIETOR. PROPERTY OF ANYTEK TECHNOLOGY CO., LTD

TITLE	TR 3.81mm 180D Series				
PART NO.	TRxx35x1xxxxG			DWG NO.	8TR0202
APPROVED	CHECKED	DESIGNED	DRAWN	CUST NO.	
		Tason 2011.02.21	Tason 2010.10.26	UNIT: mm / SCALE: NONE / SHEET: 01/01	REV.: E

Tolerance	
X.	±0.50
X.X	±0.30
X.XX	±0.10
X°	±1°