THIS DRAWING IS UNPUBLISHED. RELEASED FOR PUBLICATION ,19 .
© COPYRIGHT 19 BY AMP INCORPORATED. ALL RIGHTS RESERVED.

LOC	DIST
AD	25

REVISIONS

P	LTR	DESCRIPTION	DATE	DWN	APVD
	0	DRAWN; WAS 95-5505-160-1	-	-	-
	A	REV PER EC 0U1B-0391-00	10 JAN 01	BC	CR
	B	REV PER EC 0512-0159-03	06JAN04	MJM	AS

1. HOUSING MATERIAL: GLASS-FILLED POLYESTER. COLOR: GRAY.
2. CONTACT MATERIAL: PHOSPHOR BRONZE.
3. CONTACT FINISH: DIN 41612 CLASS 2 IN CONTACT AREA. TIN-LEAD ON POSTS.
4. PART NUMBER, DATE CODE IDENTIFICATION, CSA LOGO IN THIS APPROXIMATE AREA ON OPPOSITE SIDE SHOWN.
5. CONTACT POINT.
6. RECOMMENDED HOLE SIZE FOR MANUAL APPLICATION OF CONNECTOR ONTO PC BOARD.

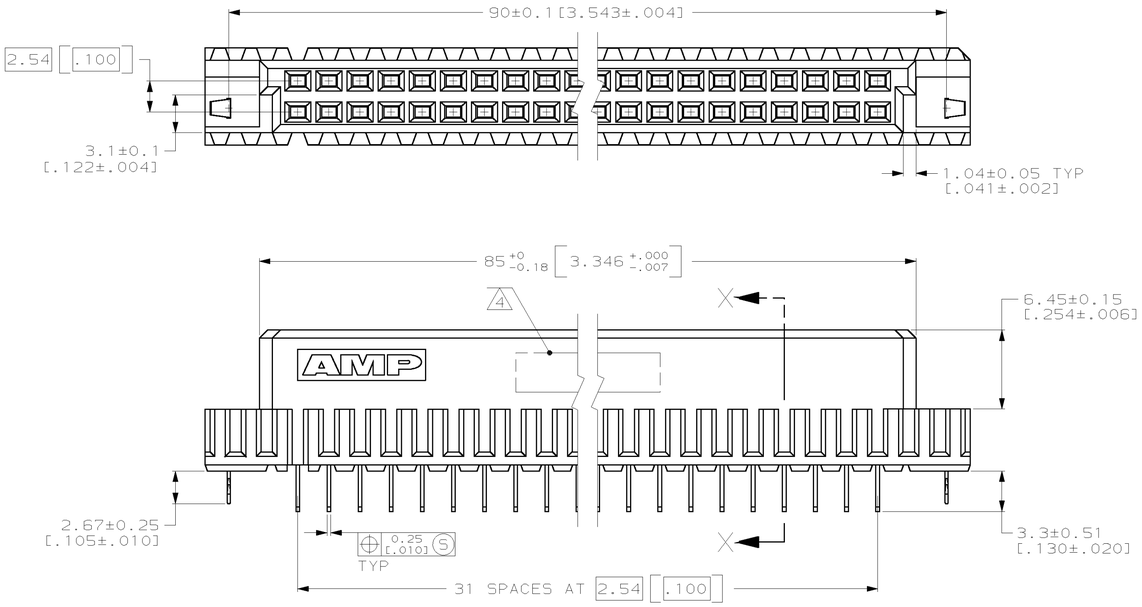

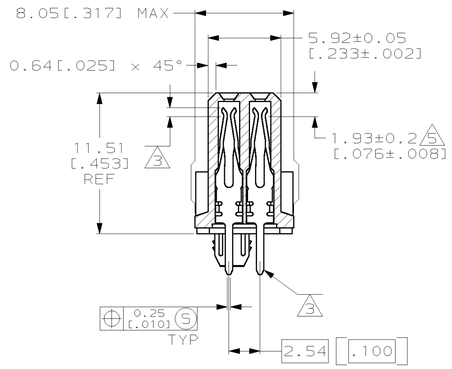

SECTION X-X

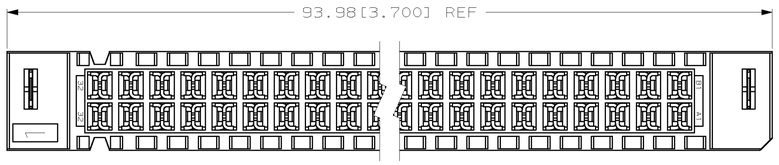

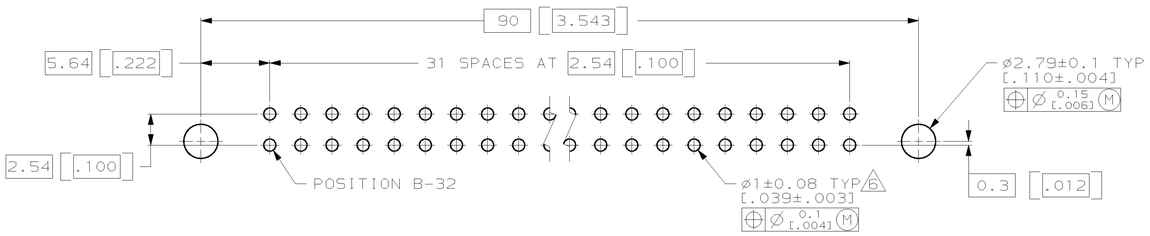

RECOMMENDED PC BOARD LAYOUT

POSITIONS LOADED	ROWS	NO. OF LOADED POSITIONS	PART NUMBER
1,9-24,32	B	18	148275-1
1,9-24,32	A	18	

THIS DRAWING IS A CONTROLLED DOCUMENT FOR AMP INCORPORATED. IT IS SUBJECT TO CHANGE AND THE CONTROLLING ENGINEERING ORGANIZATION SHOULD BE CONTACTED FOR THE LATEST REVISION.

DIMENSIONS: mm [INCHES]

TOLERANCES UNLESS OTHERWISE SPECIFIED:
0 PLC ±-
1 PLC ±-
2 PLC ±0.13[.005]
3 PLC ±-
4 PLC ±-
ANGLES ±-

MATERIAL - HOUSING: 1 POST: 2
FINISH - POST: 3

DWN L. BRINER 4/30/96
CHK C. RICHARD 4/30/96
APVD C. RICHARD 4/30/96
PRODUCT SPEC -
APPLICATION SPEC -
WEIGHT -

AMP Incorporated
Harrisburg, PA 17105-3608

NAME RECEPTACLE ASSEMBLY, EUROCARD, TYPE B WITH BOARDLOCKS

SIZE A1 CAGE CODE 00779 DRAWING NO C-148275

CUSTOMER DRAWING SCALE 4:1 SHEET 1 OF 1 REV B

AMP 4805 REV 09MAY94