DRAWING MADE IN AMERICAN PROJECTION

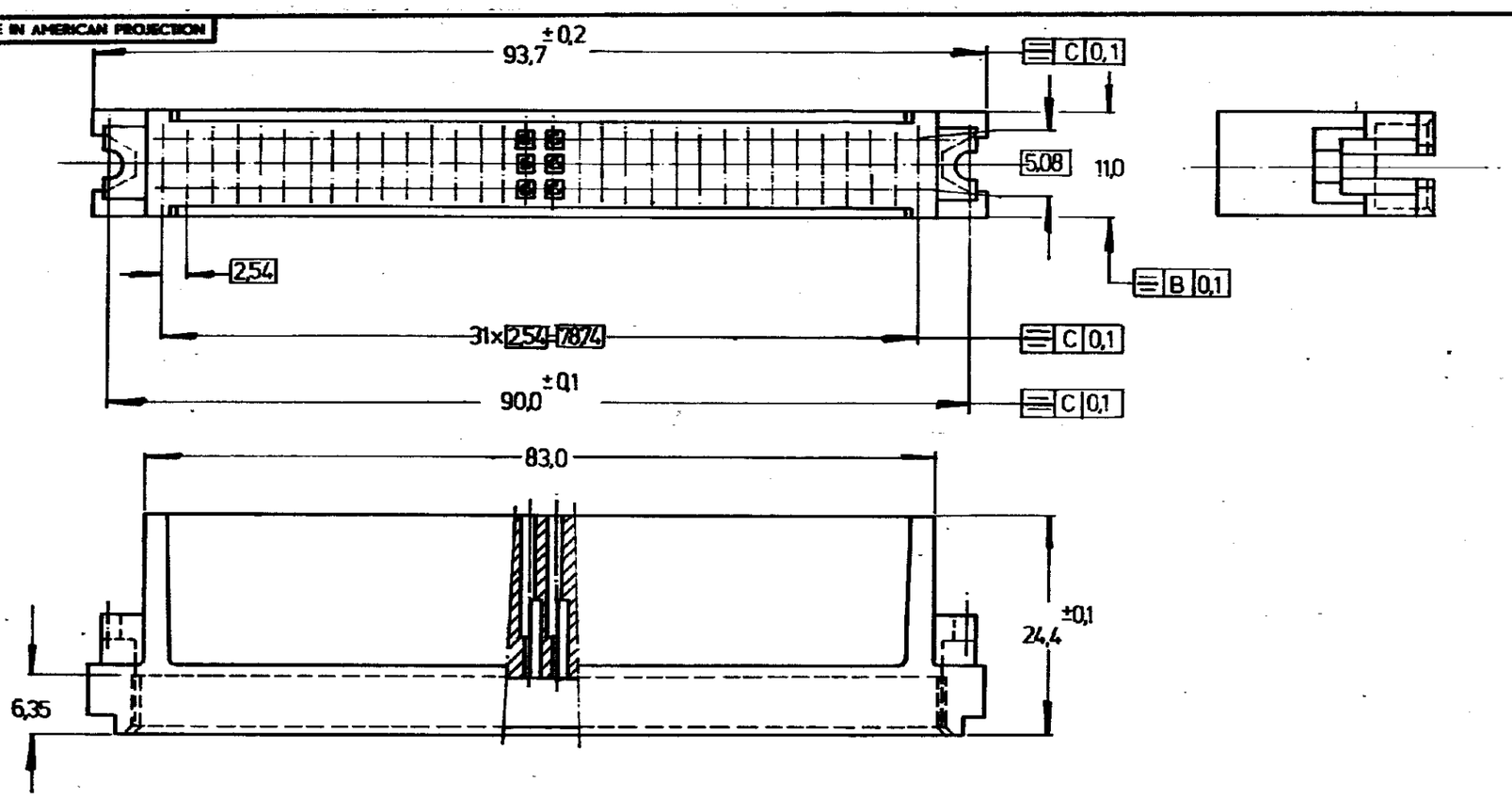

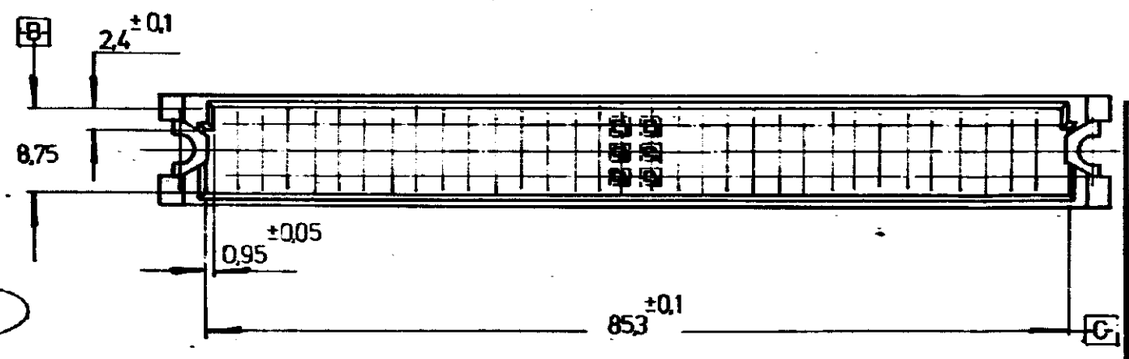

166467_1	GLASSFILLED POLYESTER	GREY
ORDER NO.	MATERIAL	PLATING

CUSTOMER COPY FOR REFERENCE ONLY

NUMBER C_166467_E

DR C.F. Strusa DATE 30th June '80
CHK DATE
DE DATE
APP DATE 30.6.80

© 1980 BY AMP-HOLLAND N.V. ALL RIGHTS RESERVED A-MP PRODUCTS COVERED BY PATENTS AND/OR PATENTS PENDING.

WIRE-RANGE | INSUL.-RANGE | FIRST USED

AMP - HOLLAND N.V. 's-Hertogenbosch

SCALE 2:1 | SIZE B | NO C_166467_E | REV. X

NAME 96 POS. I.E.C. C MALE "COSI" HSG

DIMENSIONS IN M.M. DO NOT SCALE PRINT

AMP 1263-H

NOT the LATEST REVISION