THIS DRAWING IS UNPUBLISHED. RELEASED FOR PUBLICATION ,19 .
© COPYRIGHT 19 BY AMP INCORPORATED. ALL RIGHTS RESERVED.

| LOC | DIST |
|---|---|
| AJ | 16 |

REVISIONS

| P | LTR | DESCRIPTION | DATE | DWN | APVD |
|---|---|---|---|---|---|
| | 0 | RELEASED CUSTOMER DRAWING PER 0503-0324-97 | 2-3-97 | JG | SB |
| | A | REVISED PER 0503-0603-97 | 9-30-97 | JG | SB |

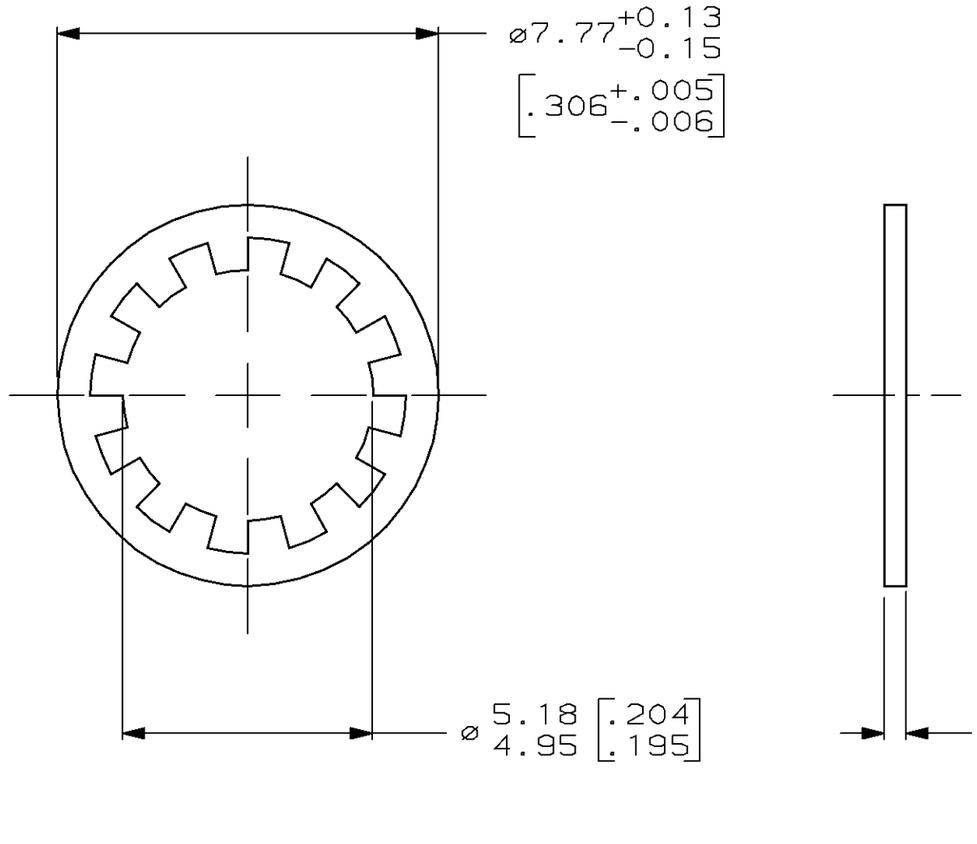


1. MATERIAL: PHOSPHOR BRONZE PER (QQ-B-750)
2. 2.54 µm [.000100] MIN THK NICKEL PLATE OVER
   1.27 µm [.000050] MIN THK COPPER PLATE
3. 0.76 µm [.000030] MIN THK GOLD PLATE OVER
   2.54 µm [.000100] MIN THK NICKEL PLATE OVER
   1.27 µm [.000050] MIN THK COPPER PLATE

| 3 | 415001-3 |
|---|---|
| 2 | 415001-2 |
| FINISH | PART NUMBER |

THIS DRAWING IS A CONTROLLED DOCUMENT.

DIMENSIONS: mm [INCHES]

TOLERANCES UNLESS OTHERWISE SPECIFIED:
0 PLC ±-
1 PLC ±-
2 PLC ±-
3 PLC ±-
4 PLC ±-
ANGLES ±-

MATERIAL - 1

FINISH - 2 3

DWN J.L.GROFT
CHK S.W.BURHOLDER
APVD S.W.BURHOLDER
PRODUCT SPEC —
APPLICATION SPEC —
WEIGHT —

CUSTOMER DRAWING

AMP Incorporated
Harrisburg, PA 17105-3608

NAME: LOCKWASHER

| SIZE | CAGE CODE | DRAWING NO |
|---|---|---|
| A3 | 00779 | C-415001 |

SCALE 8:1 SHEET 1 OF 1 REV A

AMP 1470-19 REV 23FEB95

30-SEP-97 16:22:37 amp03419 /home/amp03419/edmmod