THIS DRAWING IS UNPUBLISHED. RELEASED FOR PUBLICATION - , - .
© COPYRIGHT - By - ALL RIGHTS RESERVED.

LOC	DIST
GP	00

REVISIONS

P	LTR	DESCRIPTION	DATE	DWN	APVD
	U1	REVISED PER ECO-11-004835	11MAR11	RK	HMR

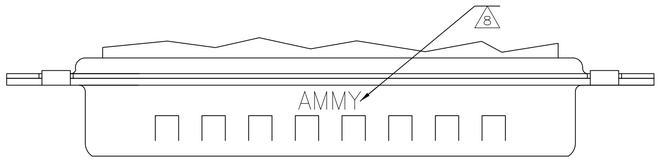

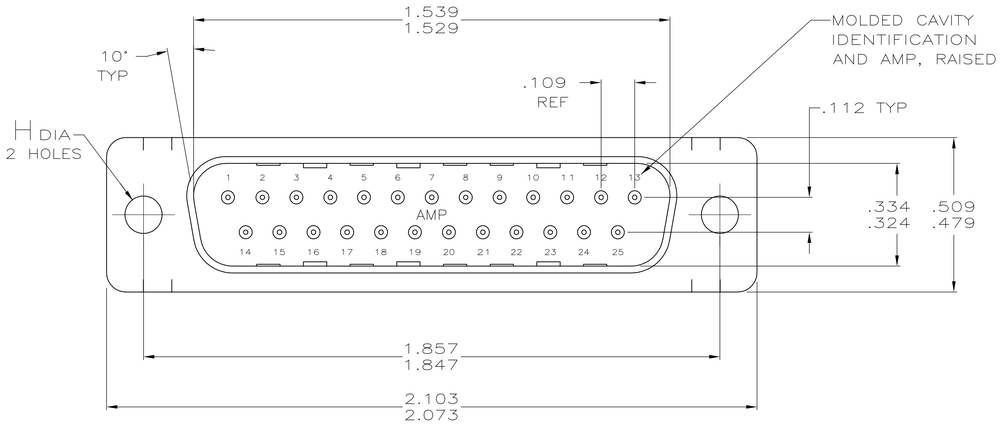

1. HOUSING FULLY LOADED WITH CONTACTS.
2. NUMBER ON CONTACT INDICATES WIRE RANGE.
3. CONTACT INSULATION RANGE: .060 MAXIMUM O.D.
4. CONTACTS GOLD PLATED FOR A LENGTH OF .150 MIN FROM MATING END, .000030 MIN GOLD IN MATED AREA, .000100-.000200 BRIGHT TIN OR BRIGHT TIN-LEAD IN AREA SHOWN, ALL OVER .000050 MIN NICKEL UNDERPLATE ON ENTIRE CONTACT.
   OR
   CONTACTS GOLD PLATED FOR A LENGTH OF .150 MIN FROM MATING END, GOLD FLASH OVER .000030 MIN PALLADIUM-NICKEL IN MATED AREA, .000100-.000200 BRIGHT TIN OR BRIGHT TIN-LEAD IN AREA SHOWN, ALL OVER .000050 MIN NICKEL UNDERPLATE ON ENTIRE CONTACT.
5. CONTACTS PLATED GOLD FLASH FOR A LENGTH OF .150 MIN FROM MATING END, .000100-.000200 BRIGHT TIN OR BRIGHT TIN-LEAD IN AREA SHOWN, ALL OVER .000030 MIN NICKEL UNDERPLATE ON ENTIRE CONTACT.
6. .000020 GOLD ON MATING END FOR .150 MIN LENGTH. .000100-.000200 BRIGHT TIN OR BRIGHT TIN-LEAD IN AREA SHOWN. .000050 NICKEL UNDERPLATE ON ENTIRE CONTACT.
7. GOLD PLATED FOR LENGTH OF .150 MIN FROM MATING END, .000050 MIN GOLD IN MATED AREA. .000100-.000200 BRIGHT TIN OR BRIGHT IN TIN-LEAD AREA SHOWN. .000050 NICKEL UNDERPLATE ON ENTIRE CONTACT.
8. SPECIAL DATE CODE IN THIS APPROXIMATE AREA. A; MM = MONTH; Y = LAST DIGIT OF YEAR.
9. OBSOLETE PART NUMBER.
10. SUPERSEDED BY 745496-5.
11. CONTACTS GOLD PLATED FOR A LENGTH OF .150 MIN FROM MATING END, .000030 MIN GOLD IN MATED AREA, .000100-.000200 MATTE TIN IN AREA SHOWN, ALL OVER .000050 MIN NICKEL UNDERPLATE ON ENTIRE CONTACT.
    OR
    CONTACTS GOLD PLATED FOR A LENGTH OF .150 MIN FROM MATING END, GOLD FLASH OVER PALLADIUM-NICKEL, .000030 MIN TOTAL IN MATED AREA, .000100-.000200 MATTE TIN IN AREA SHOWN, ALL OVER .000050 MIN NICKEL UNDERPLATE ON ENTIRE CONTACT.
12. CONTACTS PLATED GOLD FLASH FOR A LENGTH OF .150 MIN FROM MATING END, .000100-.000200 MATTE TIN IN AREA SHOWN, ALL OVER .000030 MIN NICKEL UNDERPLATE ON ENTIRE CONTACT.

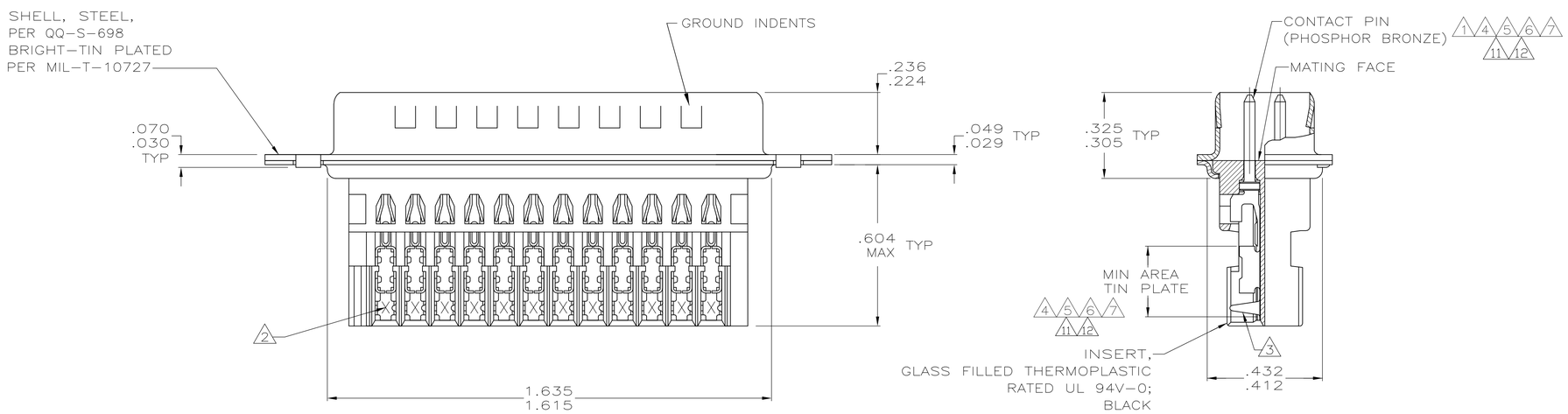

	STANDARD	.125 .115	11	3	#20-22	2-745496-0
	STANDARD	.125 .115	11	1	#26-30	1-745496-9
	STANDARD	.125 .115	12	2	#22-26	1-745496-8
	STANDARD	.125 .115	11	2	#22-26	1-745496-7
	SMALL PACK	.125 .115	5	2	#22-26	10 1-745496-6
8	STANDARD	.125 .115	7	2	#22-26	9 1-745496-4
	STANDARD	.125 .115	6	2	#22-26	9 1-745496-3
	STANDARD	.156 .146	5	3	#20-22	9 1-745496-2
				2	#22-26	9 1-745496-1
				1	#26-30	9 1-745496-0
	STANDARD	.156 .146	4	3	#20-22	9 745496-9
				2	#22-26	9 745496-8
				1	#26-30	9 745496-7
	STANDARD	.125 .115	5	3	#20-22	9 745496-6
				2	#22-26	9 745496-5
				1	#26-30	9 745496-4
	STANDARD	.125 .115	4	3	#20-22	9 745496-3
				2	#22-26	9 745496-2
				1	#26-30	9 745496-1
	PACKAGING	H	CONTACT FINISH	2	AWG WIRE RANGE	PART NUMBER

THIS DRAWING IS A CONTROLLED DOCUMENT.

DIMENSIONS: INCHES

TOLERANCES UNLESS OTHERWISE SPECIFIED:
0 PLC ± -
1 PLC ± -
2 PLC ± -
3 PLC ± .005
4 PLC ± -
ANGLES ± 2°

MATERIAL: SEE CALL OUT
FINISH: SEE TABLE

DWN L. VARELA - DOCK5 3/26/90
CHK J. GERACE 11-16-04
APVD M. WALMSLEY 11-16-04
PRODUCT SPEC 108-40011
APPLICATION SPEC 114-40002
WEIGHT -

TE Connectivity

NAME: PLUG ASSY, METAL SHELL, SIZE 3, 25 POSN, SERIES HDE-20 FOR MASS TERMINATION

SIZE	CAGE CODE	DRAWING NO	RESTRICTED TO
A1	00779	C-745496	-

CUSTOMER DRAWING | SCALE 4:1 | SHEET 1 OF 1 | REV U1

4805 (3/11)