REV.	DATE	DESCRIPTION
A	06/29/04	UPDATE DRAWING FORMAT
B	03/27/05	ADD 17.5 HEX DIMNSION

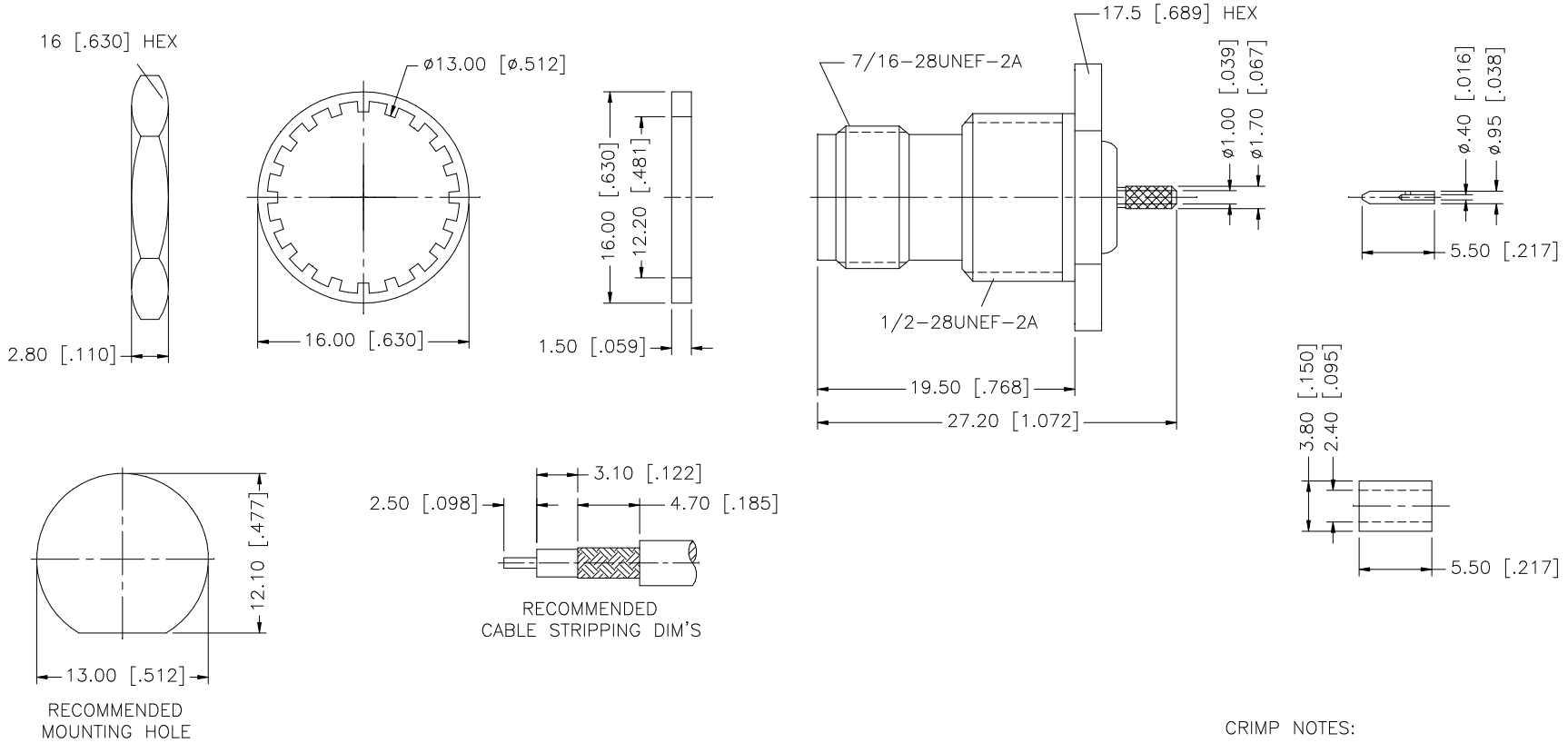

CRIMP NOTES:

1. CRIMPED FERRULE
   HEX CRIMP SIZE .128"
2. CRIMPED CONTACT PIN
   SQ. CRIMP SIZE .7mm
3. MAX. PANEL THICKNESS= 5.5mm

	DESCRIPTION	MATERIAL	FINISH	QTY
8				
7	FERRULE	COPPER	NICKEL	1
6	HEX NUT	BRASS	NICKEL	1
5	LOCK WASHER	BRASS	NICKEL	1
4	GASKET	RUBBER	RED	1
3	CONTACT PIN	BRASS	GOLD	1
2	INSULATOR	DELRIN	NATURAL	1
1	BODY	BRASS	NICKEL	1

UNLESS OTHERWISE SPECIFIED DIMENSIONS ARE IN MILLIMETERS. DIMENSIONS IN [ ] ARE IN INCHES AND FOR CUSTOMER REFERANCE ONLY.

UNLESS OTHERWISE SPECIFIED TOLERANCES FOR MILLIMETERS ARE:
0.5 – 8mm ± 0.20mm
8 – 30mm ± 0.40mm
30 – 120mm ± 0.50mm

UNLESS OTHERWISE SPECIFIED TOLERANCES FOR INCHES ARE:
.020 – .315 = ± 0.007"
.315 – 1.180 = ± 0.015"
1.180 – 4.724 = ± 0.020"

DO NOT SCALE DRAWING

APPROVALS		DATE
DRAWN	G.R.S.	03/27/05
CHECKED		
ISSUED		
SHEET	1 OF 1	
CAD FILE	C:/122/122370.DWG	

Amphenol Connex

PART DESCRIPTION: TNC BULKHEAD CRIMP JACK (FOR RG–178B/U, 196A/U CABLE)

PART NO. 122370

DWG. NO.	REV.	SIZE	SCALE
122370.DWG	B	A	NA