THIS DRAWING IS UNPUBLISHED. RELEASED FOR PUBLICATION -,- .
© COPYRIGHT - By - ALL RIGHTS RESERVED.

| LOC | DIST |
|---|---|
| DF | SO |

REVISIONS

| P | LTR | DESCRIPTION | DATE | DWN | APVD |
|---|---|---|---|---|---|
| | H | REV PER ECO 06-006193 | 29MAR06 | PY | DE |
| | J | REVISED PER ECO-14-008032 | 22JUL14 | MGM | CT |

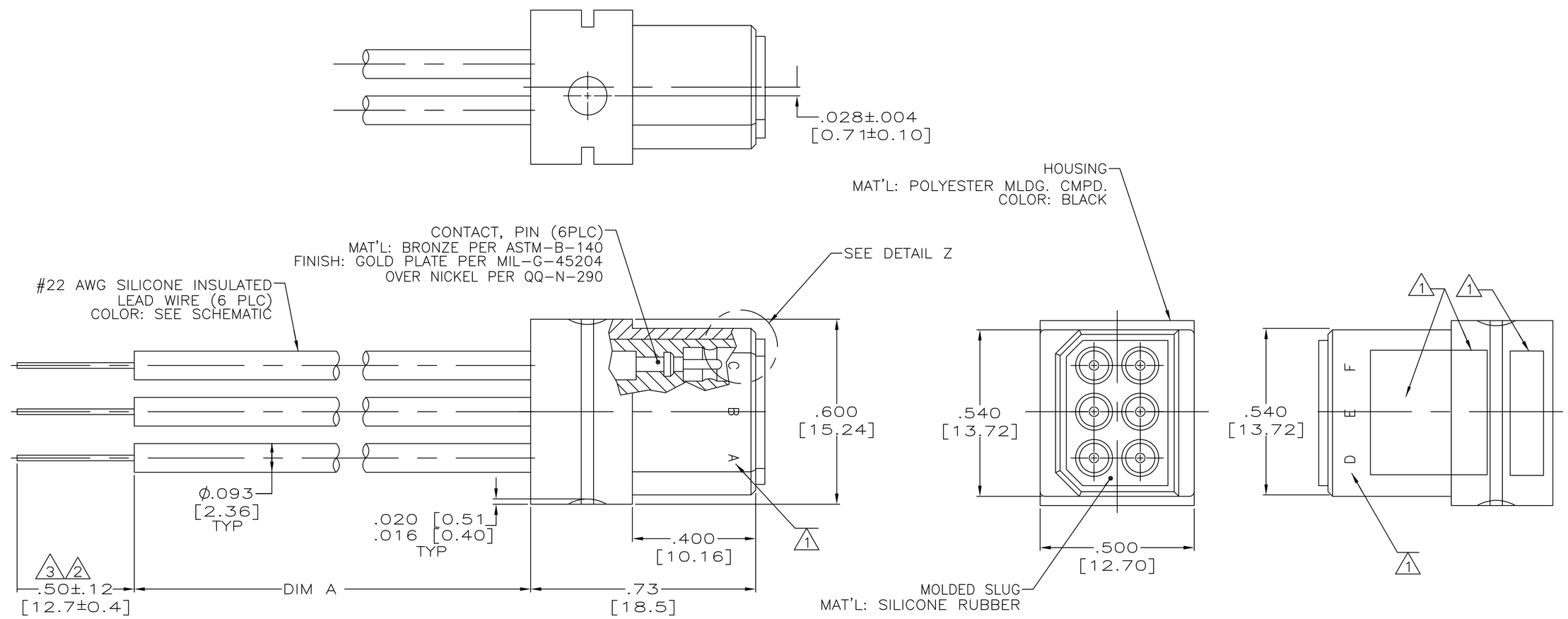


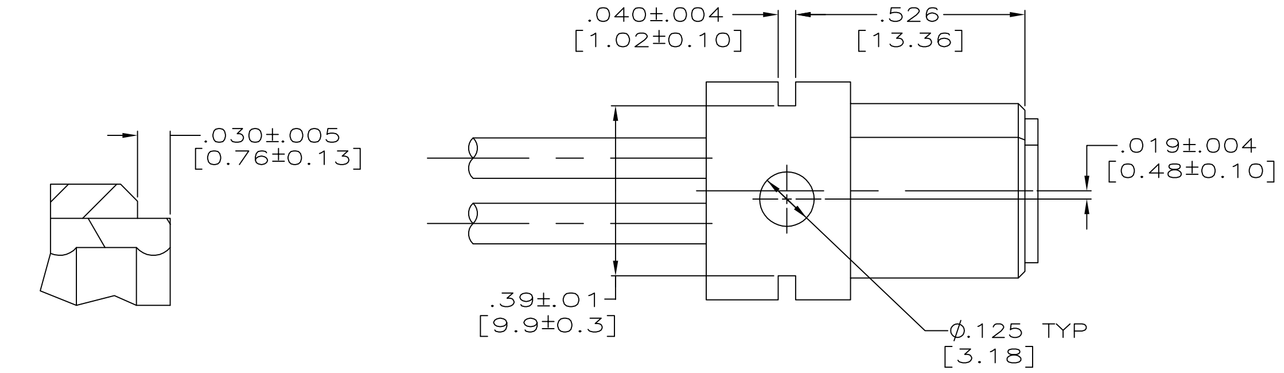


DETAIL Z
SCALE 10:1

| | |
|---|---|
| A | YELLOW |
| B | RED |
| C | BROWN |
| D | BLUE |
| E | GREEN |
| F | BLACK |

SCHEMATIC

| REMARKS | DIM A | PART NUMBER |
|---|---|---|
| 3 | 15.00±.50 [381.0±12.7] | 5-867622-1 |
| 2 | 24.00±.50 [609.6±12.7] | 867622-2 |
| 2 | 15.00±.50 [381.0±12.7] | 867622-1 |

1. AMP INFORMATION MARKED PER MIL-STD-130.
2. PIGTAILS ARE SOLDER-DIPPED.
3. INSULATION CUT, BUT NOT REMOVED.

THIS DRAWING IS A CONTROLLED DOCUMENT.

DIMENSIONS: INCHES

TOLERANCES UNLESS OTHERWISE SPECIFIED:
0 PLC ± -
1 PLC ± -
2 PLC ± .03 [0.8]
3 PLC ± .015 [0.38]
4 PLC ± -
ANGLES ± -

MATERIAL: SEE CALLOUTS
FINISH: SEE CALLOUTS

DWN C.C.THOMAS 12-1-92
CHK D.FABY 1-11-93
APVD -
PRODUCT SPEC -
APPLICATION SPEC -
WEIGHT -

TE Connectivity

NAME: PLUG ASSY WITH FLYING LEADS,6 POSN.,LGH

| SIZE | CAGE CODE | DRAWING NO | RESTRICTED TO |
|---|---|---|---|
| A1 | 00779 | C-867622 | - |

CUSTOMER DRAWING | SCALE 4:1 | SHEET 1 OF 1 | REV J

4805 (3/11)