REV.	DATE	DESCRIPTION
A	05/14/03	UPDATE FERRULE LENGTH
B	03/18/04	UPDATE PART DESCRIPTION

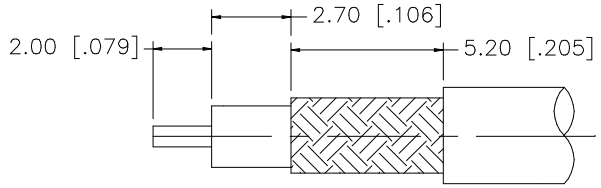

RECOMMENDED
CABLE STRIPPING DIM'S

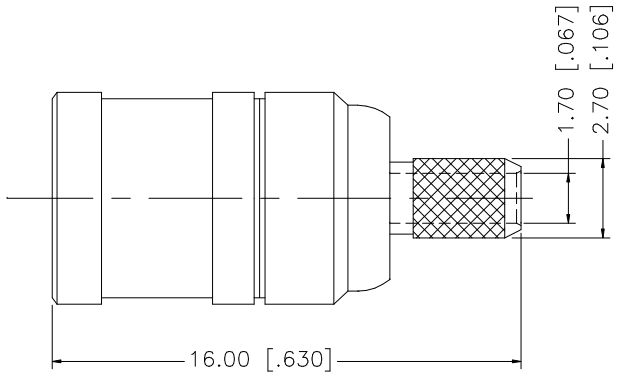

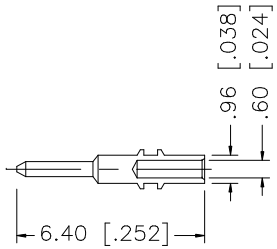

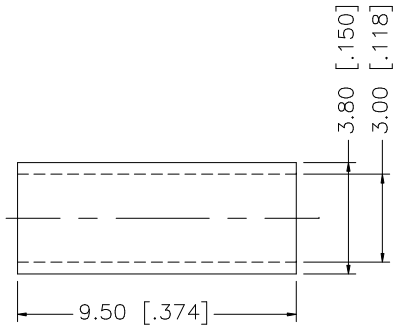

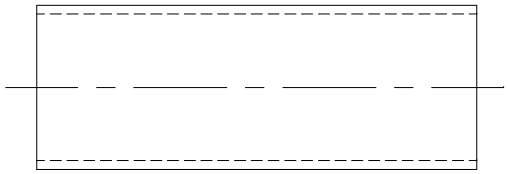

NOTE:
1. CRIMPED FERRULE
   HEX CRIMP SIZE .128"
2. CRIMPED CONTACT PIN
   SQ. CRIMPED SIZE 0.7mm

	DESCRIPTION	MATERIAL	FINISH	QTY
8				
7				
6				
5	HEAT SHRINK			
4	FERRULE	COPPER	NICKEL	1
3	CONTACT PIN	BRASS	GOLD	1
2	INSULATOR	TEFLON	NATURAL	1
1	HOUSING/BODY	BRASS	NICKEL	1

UNLESS OTHERWISE SPECIFIED DIMENSIONS ARE IN MILLIMETERS. DIMENSIONS IN [ ] ARE IN INCHES AND FOR CUSTOMER REFERANCE ONLY.

UNLESS OTHERWISE SPECIFIED TOLERANCES FOR MILLIMETERS ARE:
0.5 – 8mm ± 0.20mm
8 – 30mm ± 0.40mm
30 – 120mm ± 0.50mm

UNLESS OTHERWISE SPECIFIED TOLERANCES FOR INCHES ARE:
.020 – .315 = ± 0.007"
.315 – 1.180 = ± 0.015"
1.180 – 4.724 = ± 0.020"

DO NOT SCALE DRAWING

APPROVALS		DATE
DRAWN	G.R.S.	03/18/04
CHECKED		
ISSUED		
SHEET	1 OF 1	
CAD FILE	C:/142/142178RP.DWG	

Amphenol Connex

PART DESCRIPTION
SMB REVERSE POLARIZED PLUG
(FOR RG-174/U, 188A/U, 316/U CABLE)

PART NO. 142178RP

DWG. NO.	REV.	SIZE	SCALE
142178RP.DWG	B	A	NA