MICRO SWITCH
a Honeywell Division
FED. MFG. CODE 91929

SWITCH - ENCLOSED

CATALOG LISTING
21HE23-RB

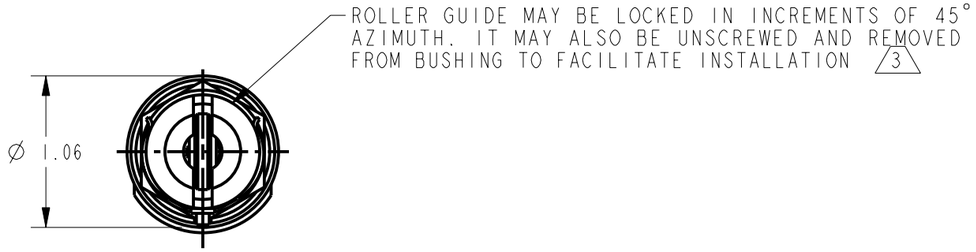

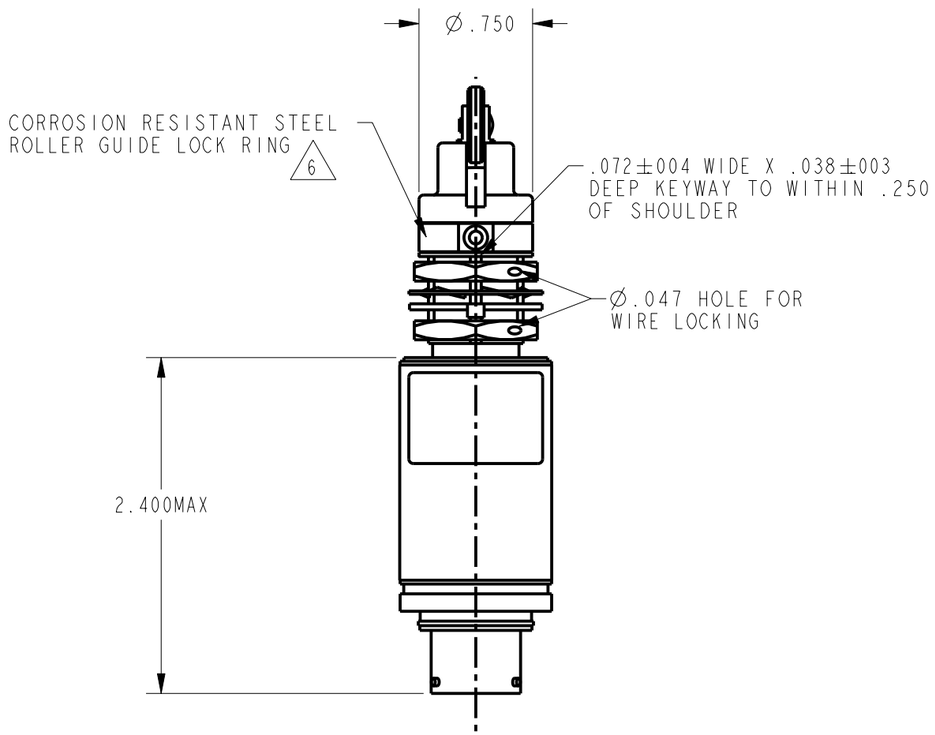

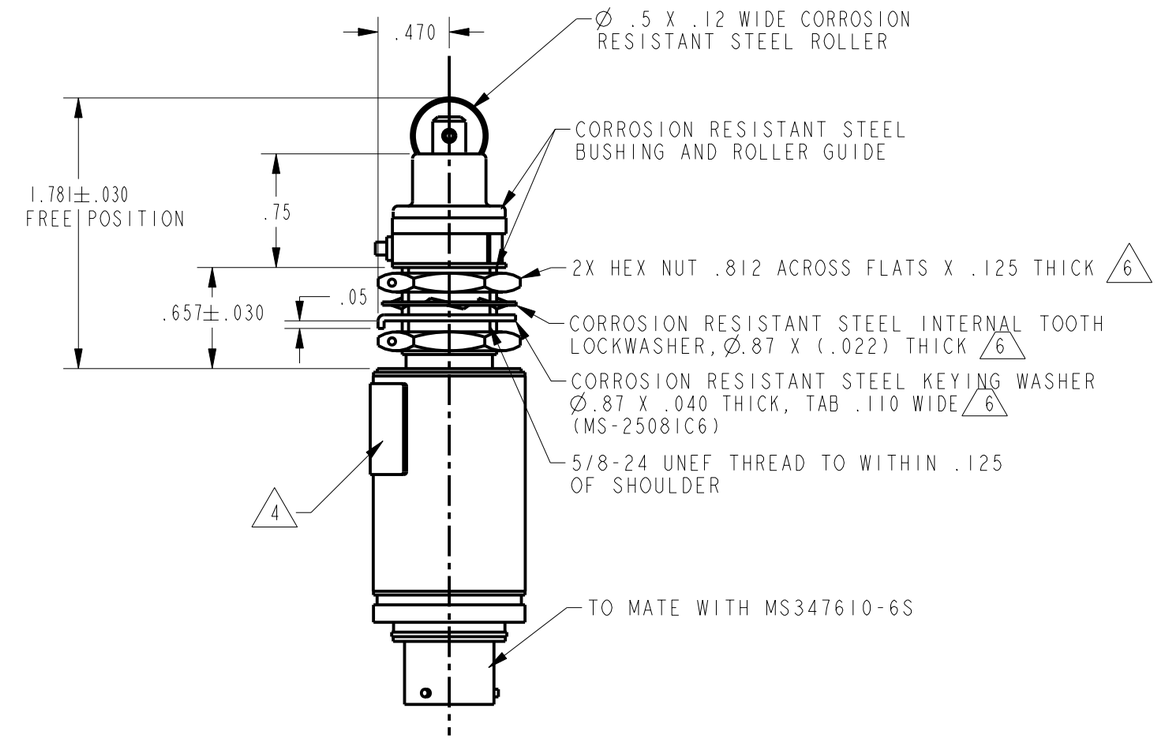

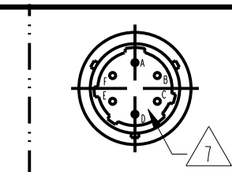

RECEPTACLE DETAIL

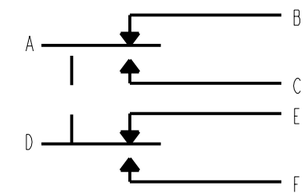

CIRCUIT DIAGRAM

NOTES
1 - ENCLOSURE FINISHED WITH BLUE EPOXY BASED ENAMEL COLOR NO. 25184 PER FED. STD. 595
2 - SWITCH SEALED PER MIL-PRF-8805 SYMBOL 5
3 - TO ADJUST ROLLER DIRECTION, REMOVE ROLLER GUIDE LOCKRING, SCREW DOWN AS FAR AS POSSIBLE, THEN UNSCREW TO DESIRED DIRECTION. SECURE BY REPLACING ROLLER GUIDE LOCKRING
4 - CIRCUIT DIAGRAM AND CATALOG LISTING ARE SHOWN ON NAMEPLATE
5 - COINCIDENCE OF OPERATING AND RELEASE POINTS: .010 INCH OF PLUNGER TRAVEL
6 - HARDWARE MAY BE PACKAGED UNASSEMBLED PER MIL-PRF-8805
7 - INTERFACIAL SEAL

THIS DRAWING COVERS A PROPRIETARY ITEM AND IS THE PROPERTY OF MICRO SWITCH, A DIVISION OF HONEYWELL. THIS DRAWING IS NOT TO BE COPIED OR USED WITHOUT THE APPROVAL OF MICRO SWITCH

THIRD ANGLE PROJECTION

SCALE FULL

DO NOT SCALE PRINT

UNLESS OTHERWISE SPECIFIED TOLERANCES ARE

ONE PLACE	(.0)	±.030
TWO PLACE	(.00)	±.015
THREE PLACE	(.000)	±.005
ANGLES		±

WEIGHT

ANSI Y14.5M-1982 APPLIES

CHARACTERISTICS

OPERATING FORCE	6-12 LB
DIFFERENTIAL FORCE	30 LB MAX
RELEASE FORCE	4 LB MIN
PRETRAVEL	.040 MAX
DIFFERENTIAL TRAVEL	.020 MAX
OVERTRAVEL	.250 MIN

ELECTRICAL DATA

CONTACT ARRANGEMENT
2X S P D T

LOAD	28 VDC	
	SEA LEVEL	100,000 FT.
RES	5	5
IND	3	3
MOTOR	4	4

CATALOG LISTING	21HE23-RB	RELEASE NO.	PR-4135-T	REPLACES	
	PAGE 1 OF 1				
ISSUE	11			CHECK	
REVISIONS					
A	CO-81044B				
	G J W 1 OCT 96				
B	CO-94996				
	LJK 7 MAY 99				
				CHECK	
				07MAY99	
				JAF	
				CHECK	
				07MAY99	
PTC/CAD	2D	DRAWN	LJK		