THIS DRAWING IS UNPUBLISHED. RELEASED FOR PUBLICATION -

© COPYRIGHT copyright_date - ALL RIGHTS RESERVED.

| LOC | DIST |
|---|---|
| GP | 00 |

REVISIONS

| P | LTR | DESCRIPTION | DATE | DWN | APVD |
|---|---|---|---|---|---|
| | A | RELEASED PER ECO-12-013192 | 18OCT2012 | BMM | MRS |

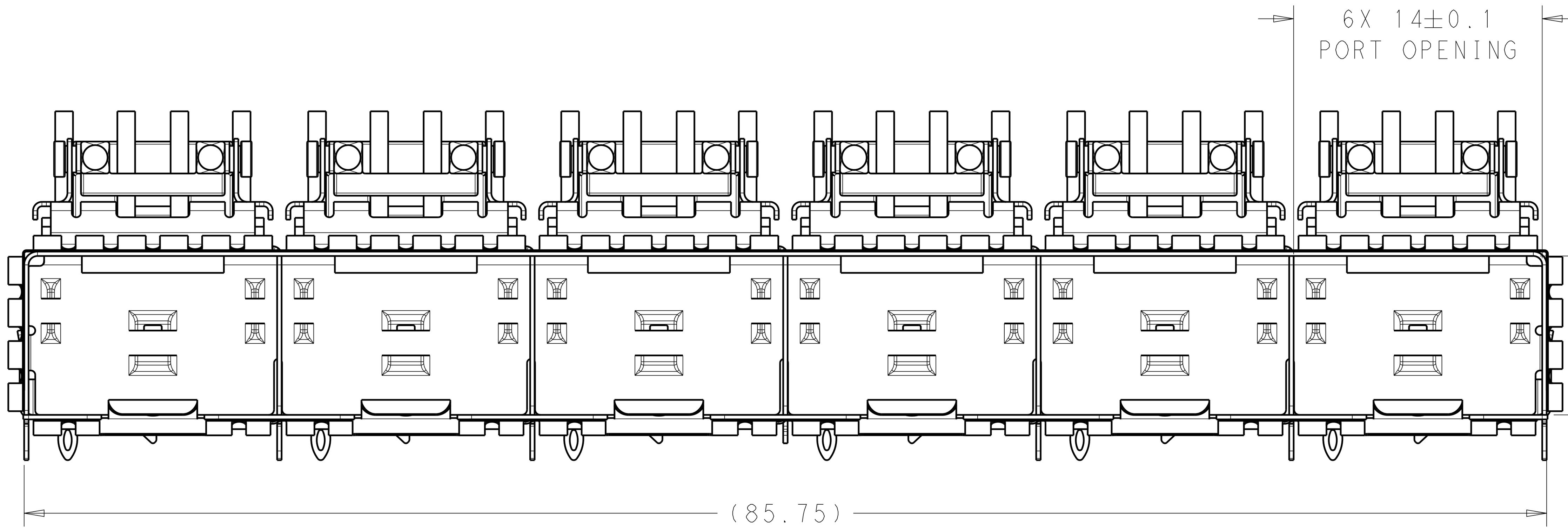


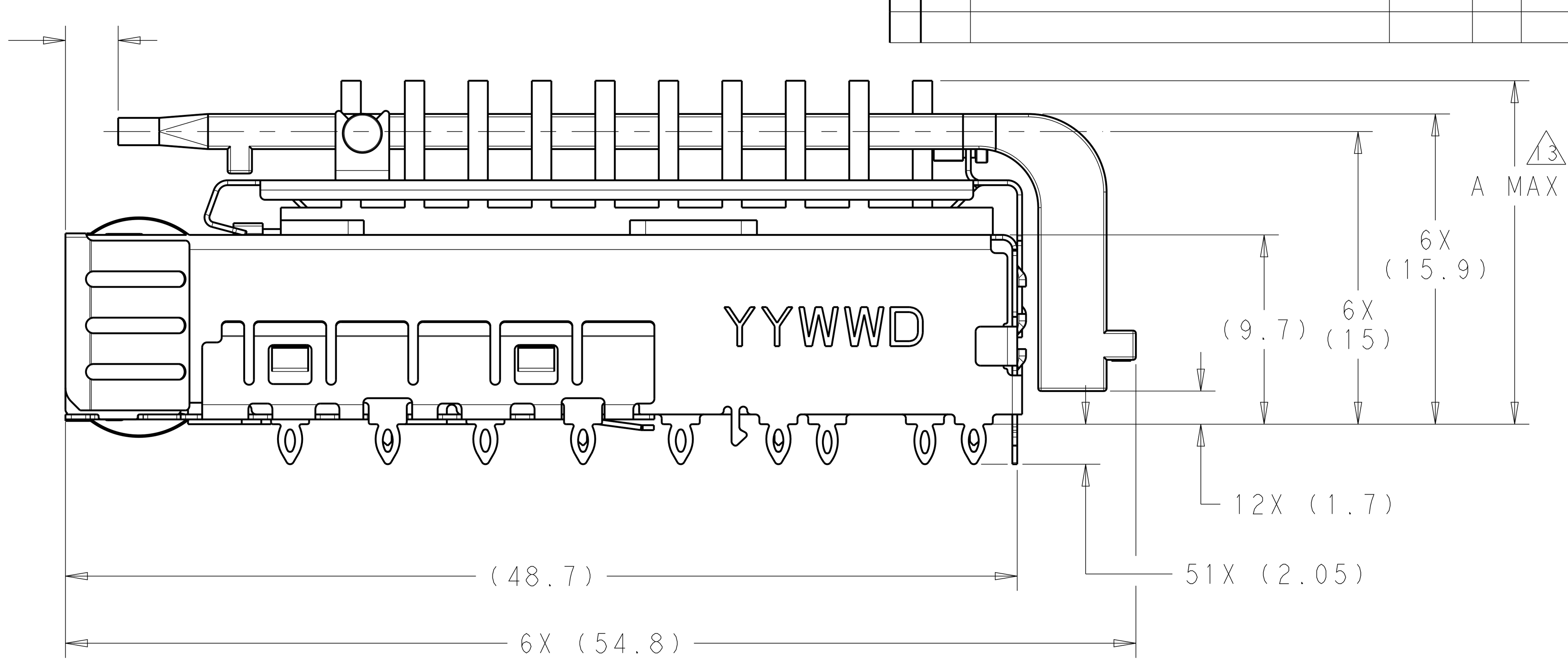


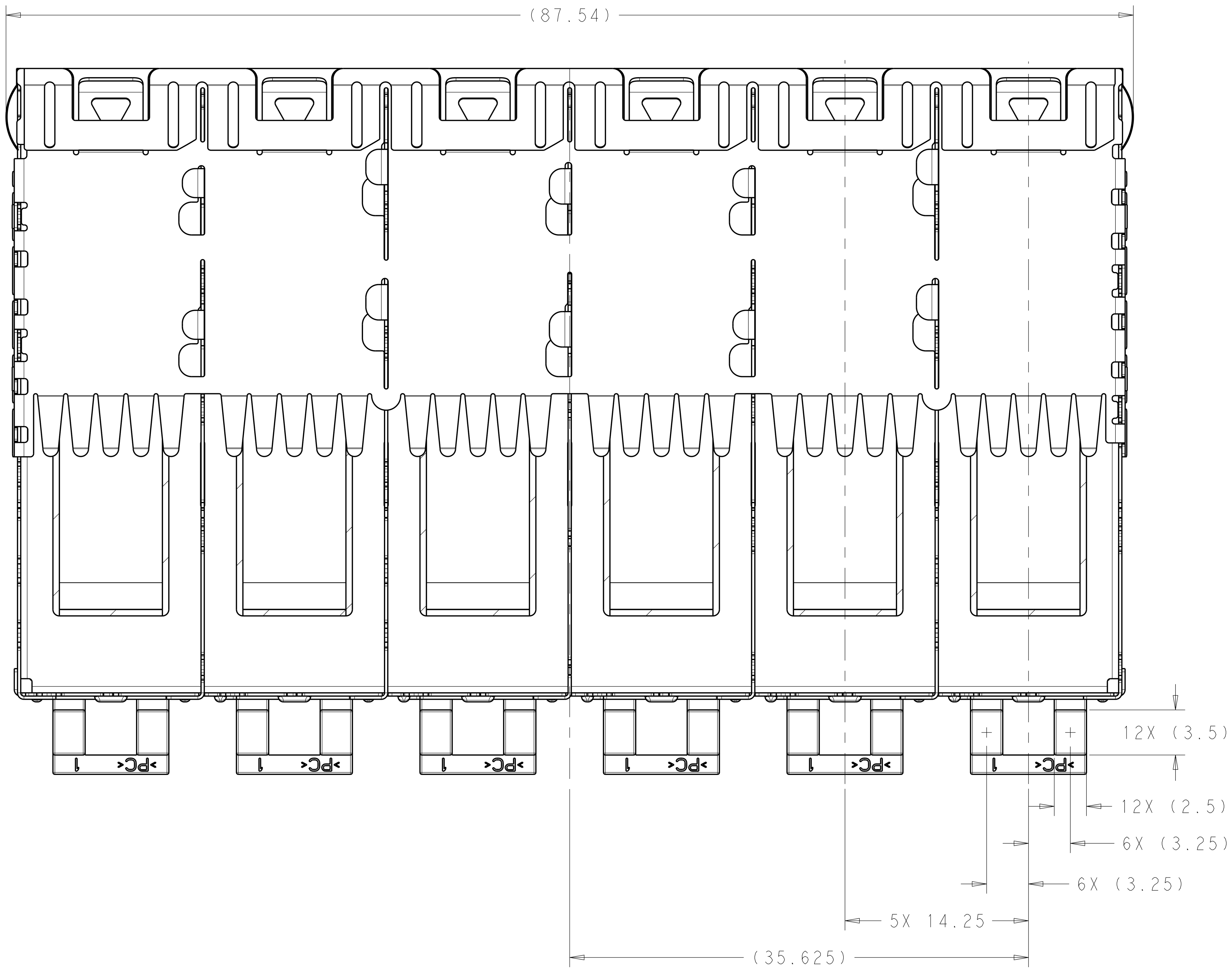


1. MATERIAL:
   CAGE ASSEMBLY: 0.25mm THICK NICKEL SILVER ALLOY.
   HEATSINK/LIGHTPIPE CLIP: STAINLESS STEEL
   LIGHT PIPE: POLYCARBONATE, CLEAR
   HEATSINK: ALUMINUM
2. FINISH:
   SPRINGS: MINIMUM OF 0.8um TIN PLATE OVER A MINIMUM OF 0.8um NICKEL UNDERPLATE. NON-PLATED EDGES PERMISSIBLE.
   HEATSINK/LIGHTPIPE CLIP: PASSIVATE
   HEATSINK: ELECTROLESS NICKEL
3. MATES WITH SFP MSA COMPLIANT TRANSCEIVERS.
4. PADS AND VIAS CHASSIS GROUND.
5. INTERPRETATION OF DATUM REFERENCE FRAME IN ACCORDANCE WITH SECT 4.4.1.1 OF ASME Y14.5M-1994.
6. MINIMUM PC BOARD THICKNESS:
   SINGLE SIDED = 1.50mm
   DOUBLE SIDED = 2.25mm
7. HOLE PATTERN REPEATS FOR EACH PORT. SPACING BETWEEN PORTS IS 14.25mm.
8. DATUM AND BASIC DIMENSION ESTABLISHED BY CUSTOMER.
9. REFERENCE APPLICATION SPEC. 114-13120, HOLE A, FOR RECOMMENDED DRILL HOLE DIAMETER AND PLATING THICKNESS.
10. REFERENCE APPLICATION SPEC. 114-13120, HOLE B, FOR RECOMMENDED DRILL HOLE DIAMETER AND PLATING THICKNESS.
11. CERTAIN MATING TRANCEIVERS MAY REQUIRE ADDITIONAL PCB THICKNESS THAT WOULD BE DETERMINED BY THE CUSTOMER.
12. PRODUCT COMPLIES WITH SPECIFICATION SFF-8433 IMPROVED PLUGGABLE FORM FACTOR FOR SFP+ GANGED CAGES.
13. DIMENSION APPLIES PRIOR TO INSERTION OF SFP MODULE
14. HEATSINK, HEATSINK CLIP, AND LIGHTPIPE SHIPPED UNASSEMBLED TO CAGE ASSEMBLY. CAGE ASSEMBLY TO BE PRESSED INTO PCB PRIOR TO ATTACHING HEATSINK, HEATSINK CLIP, AND LIGHTPIPE TO THE CAGE ASSEMBLY.
15. PACKAGED AS A COMPLETE ASSEMBLY.

| NOTE | A MAX | APPLICATION | PART NUMBER |
|---|---|---|---|
| 15 | 22.5 | NETWORKING, TALL | 2198236-4 |
| 15 | 18.1 | NETWORKING, SHORT | 2198236-3 |
| 14 | 15.5 | SAN | 2198236-2 |
| 14 | 13.2 | PCI | 2198236-1 |

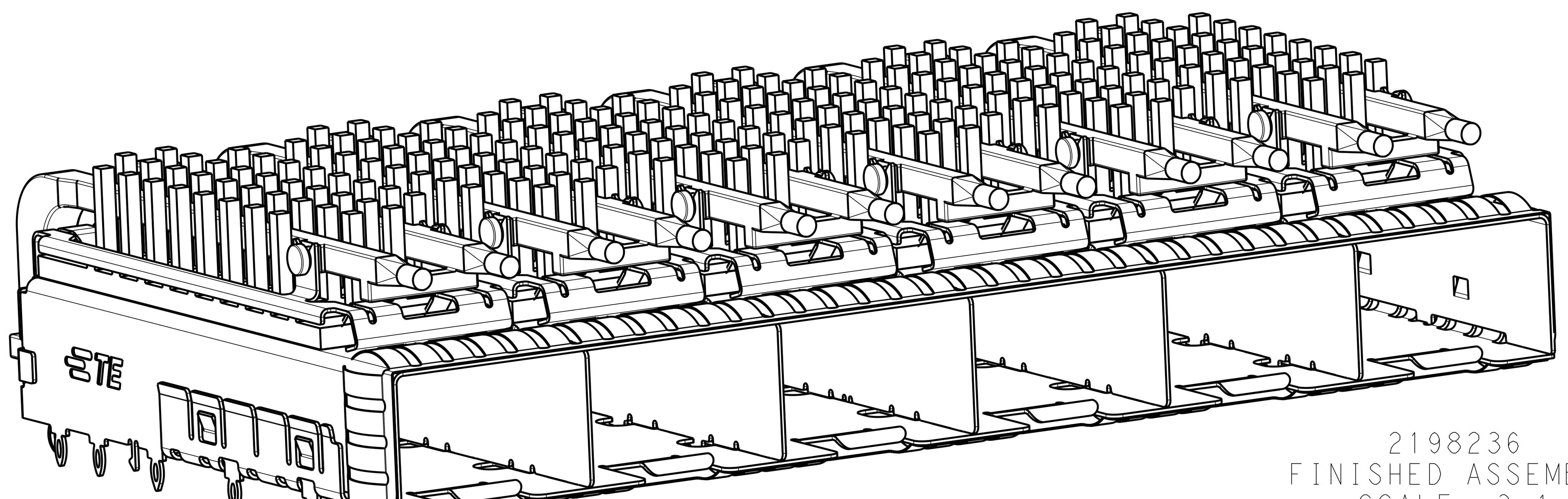

2198236
FINISHED ASSEMBLY
SCALE 3:1

THIS DRAWING IS A CONTROLLED DOCUMENT.

DIMENSIONS: mm

TOLERANCES UNLESS OTHERWISE SPECIFIED:
0 PLC ±0.1
1 PLC ±0.1
2 PLC ±0.1
3 PLC ±0.1
4 PLC ±0.1
ANGLES ±1°

MATERIAL: 1 — FINISH: 2

DWN: B. MATTHEWS 15NOV2011
CHK: M. SCHMITT 15NOV2011
APVD: M. SCHMITT 15NOV2011
PRODUCT SPEC: 108-2364
APPLICATION SPEC: 114-13120
WEIGHT: -

TE Connectivity

NAME: SFP+ ENHANCED 1X6 CAGE ASSEMBLY, PRESS FIT, EXTERNAL EMI SPRINGS WITH HEATSINK AND LIGHTPIPE

SIZE: A1 | CAGE CODE: 00779 | DRAWING NO: C-2198236 | RESTRICTED TO: -

SCALE: 4:1 | SHEET 1 OF 4 | REV A

Customer Drawing

4805 (3/11)

THIS DRAWING IS UNPUBLISHED. RELEASED FOR PUBLICATION -
© COPYRIGHT copyright.dgkc- ALL RIGHTS RESERVED.

| LOC | DIST |
|---|---|
| GP | 00 |

REVISIONS

| P | LTR | DESCRIPTION | DATE | DWN | APVD |
|---|---|---|---|---|---|
| | - | SEE SHEET 1 | - | - | - |

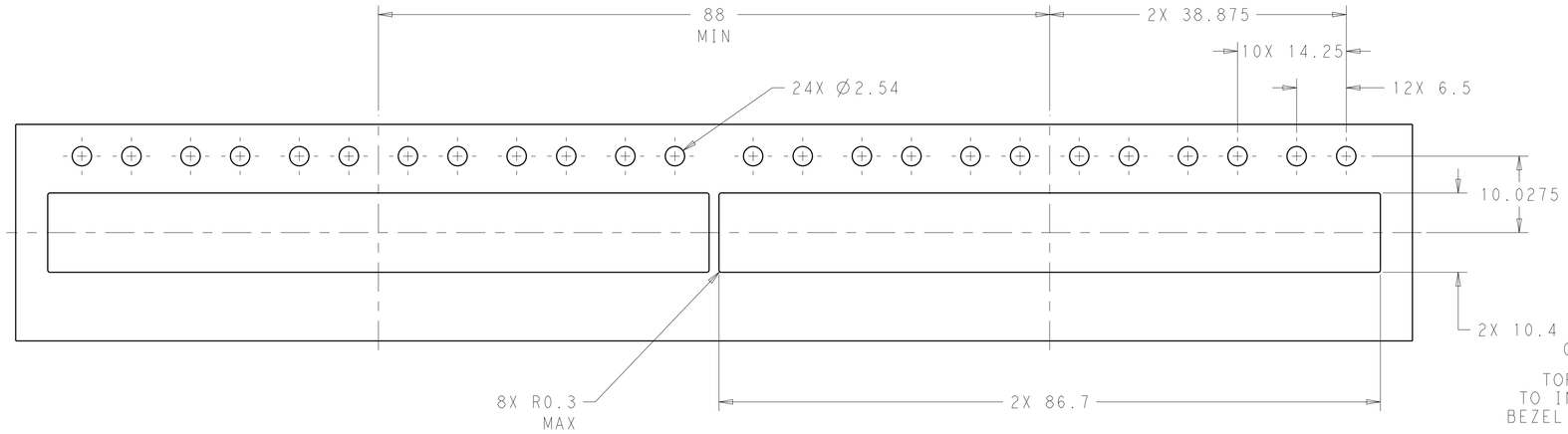


RECOMMENDED BEZEL CUT-OUT
SINGLE SIDED APPLICATIONS
SCALE 5:2

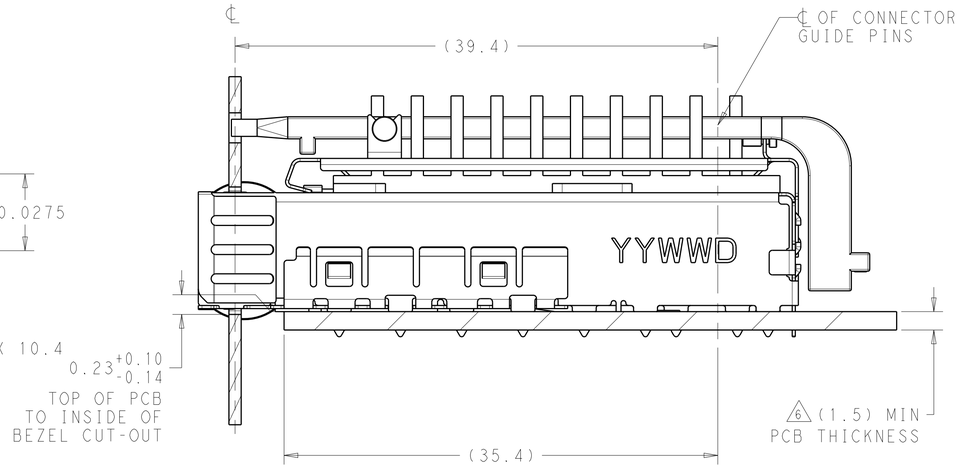


2198236
MOUNTED ON PC BOARD
SHOWN THRU RECOMMENDED BEZEL

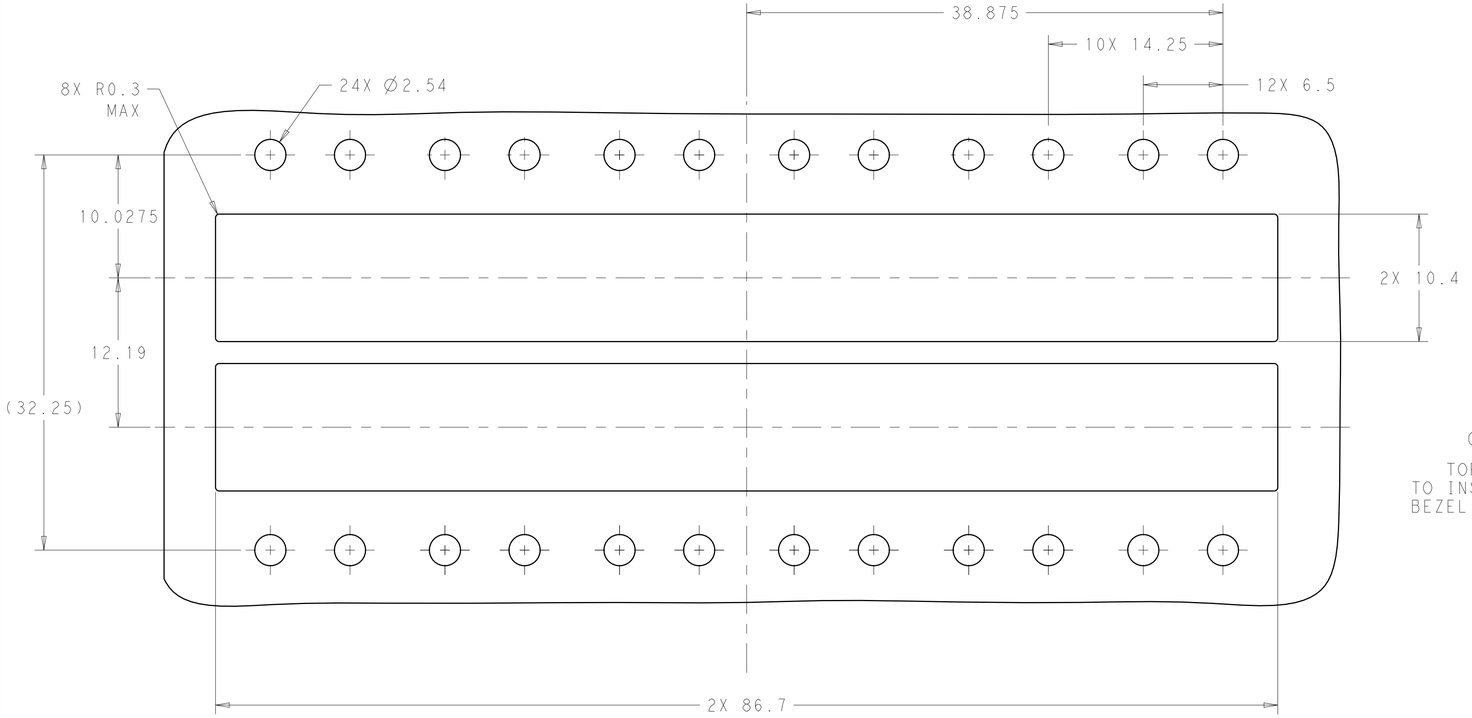


RECOMMENDED BEZEL CUT-OUT
BELLY TO BELLY APPLICATIONS

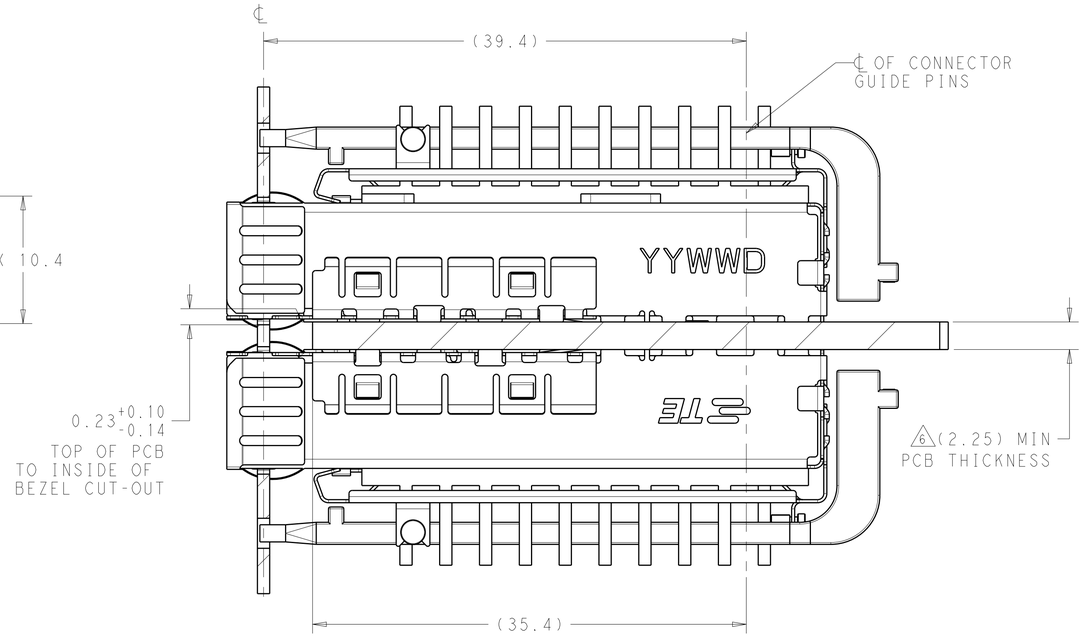


2198236
MOUNTED BELLY TO BELLY ON PC BOARD
SHOWN THRU RECOMMENDED BEZEL

THIS DRAWING IS A CONTROLLED DOCUMENT.

DIMENSIONS: mm

TOLERANCES UNLESS OTHERWISE SPECIFIED:
0 PLC ±0.1
1 PLC ±0.1
2 PLC ±0.1
3 PLC ±0.1
4 PLC ±0.1
ANGLES ±1°

MATERIAL 1
FINISH

DWN B. MATTHEWS 15NOV2011
CHK M. SCHMITT 15NOV2011
APVD M. SCHMITT 15NOV2011
PRODUCT SPEC 108-2364
APPLICATION SPEC 114-13120
WEIGHT -

TE Connectivity

NAME SFP+ ENHANCED 1X6 CAGE ASSEMBLY, PRESS FIT, EXTERNAL EMI SPRINGS WITH HEATSINK AND LIGHTPIPE

| SIZE | CAGE CODE | DRAWING NO | RESTRICTED TO |
|---|---|---|---|
| A1 | 00779 | C-2198236 | - |

Customer Drawing | SCALE 4:1 | SHEET 2 OF 4 | REV A

4805 (3/11)

THIS DRAWING IS UNPUBLISHED. RELEASED FOR PUBLICATION -
© COPYRIGHT copyright.dgkc- ALL RIGHTS RESERVED.

| LOC | DIST |
|---|---|
| GP | 00 |

REVISIONS

| P | LTR | DESCRIPTION | DATE | DWN | APVD |
|---|---|---|---|---|---|
| | - | SEE SHEET 1 | - | - | - |

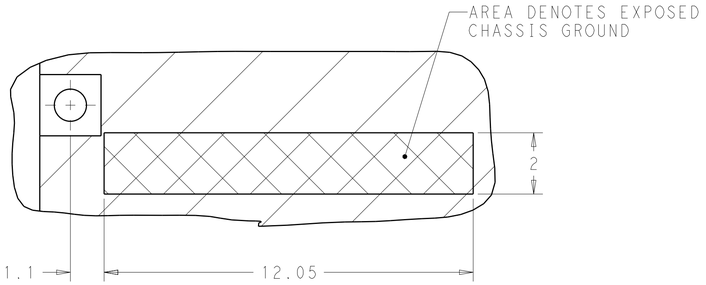


DETAIL A
6X INDIVIDUALLY
SCALE 10:1

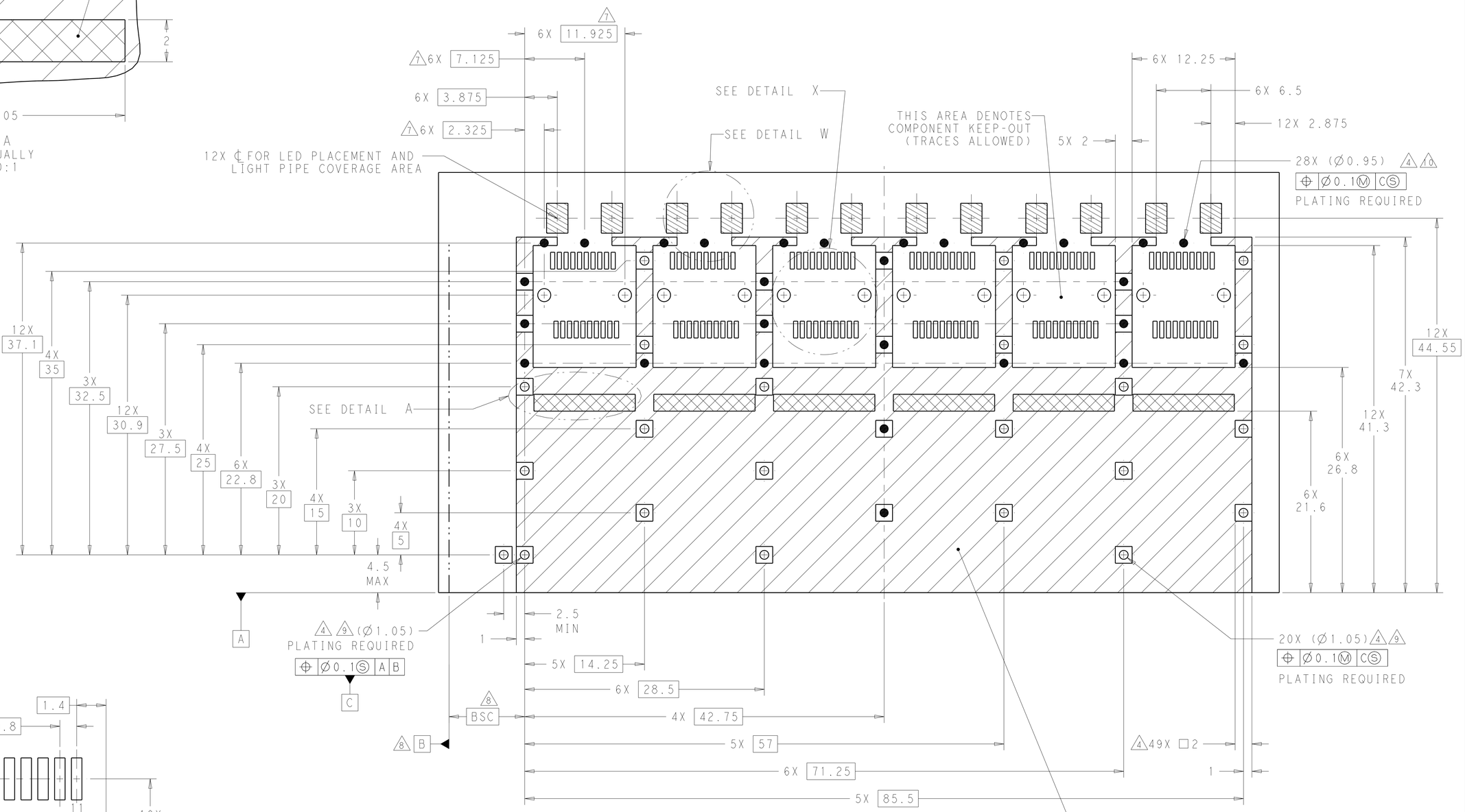


RECOMMENDED PCB CONFIGURATION
WITH KEEP-OUT AREAS
SINGLE SIDED APPLICATIONS
SCALE 4:1

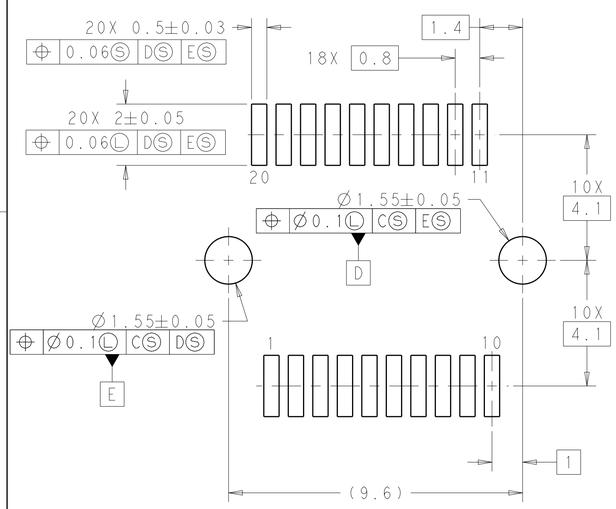


DETAIL X
RECOMMENDED PT CONNECTOR LAYOUT
6X INDIVIDUALLY
SCALE 10:1

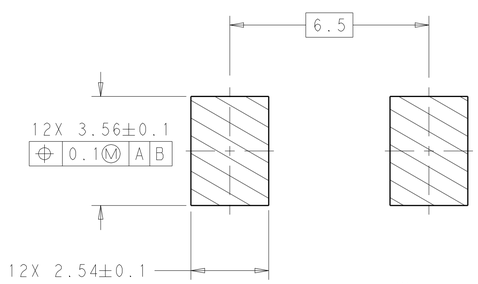


DETAIL W
SCALE 10:1

THIS DRAWING IS A CONTROLLED DOCUMENT.

DIMENSIONS: mm

TOLERANCES UNLESS OTHERWISE SPECIFIED:
0 PLC ±0.1
1 PLC ±0.1
2 PLC ±0.1
3 PLC ±0.1
4 PLC ±0.1
ANGLES ±1°

MATERIAL 1
FINISH

DWN B. MATTHEWS 15NOV2011
CHK M. SCHMITT 15NOV2011
APVD M. SCHMITT 15NOV2011
PRODUCT SPEC 108-2364
APPLICATION SPEC 114-13120
WEIGHT -

TE Connectivity

NAME SFP+ ENHANCED 1X6 CAGE ASSEMBLY, PRESS FIT, EXTERNAL EMI SPRINGS WITH HEATSINK AND LIGHTPIPE

SIZE A1 | CAGE CODE 00779 | DRAWING NO C-2198236 | RESTRICTED TO -

Customer Drawing | SCALE 4:1 | SHEET 3 OF 4 | REV A

THIS DRAWING IS UNPUBLISHED. RELEASED FOR PUBLICATION -
© COPYRIGHT copyright.dgfe- ALL RIGHTS RESERVED.

| LOC | DIST |
|---|---|
| GP | 00 |

REVISIONS

| P | LTR | DESCRIPTION | DATE | DWN | APVD |
|---|---|---|---|---|---|
| | - | SEE SHEET 1 | - | - | - |

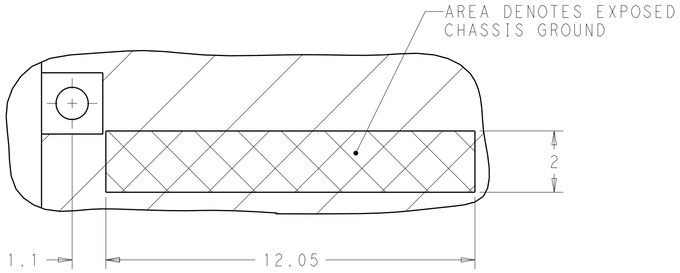


DETAIL B
6X INDIVIDUALLY
SCALE 10:1

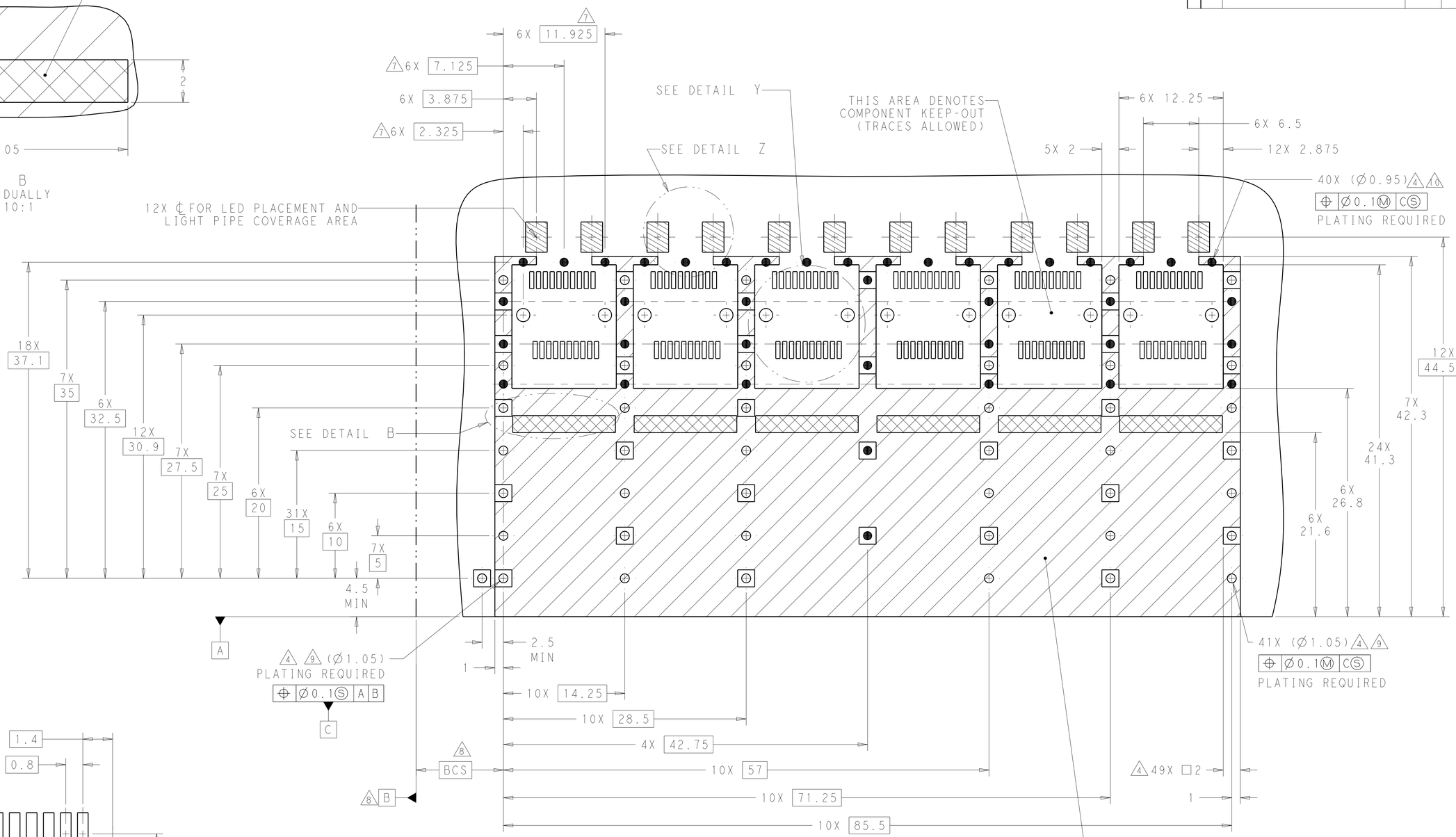


RECOMMENDED PCB CONFIGURATION
WITH KEEP-OUT AREAS
BELLY TO BELLY APPLICATIONS
SCALE 4:1

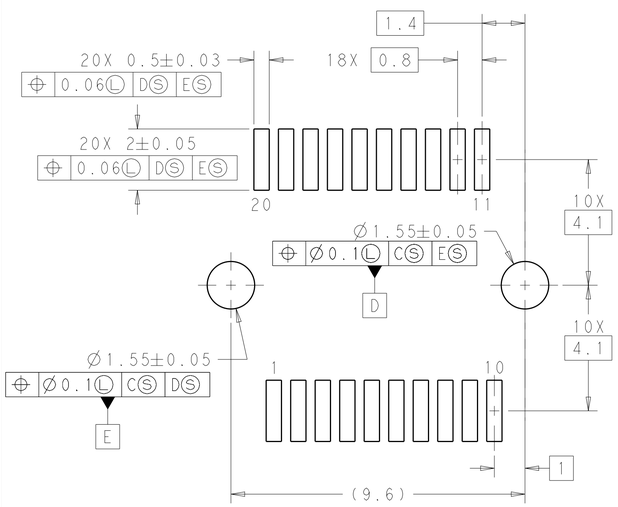


DETAIL Y
RECOMMENDED PT CONNECTOR LAYOUT
12X INDIVIDUALLY
SCALE 10:1

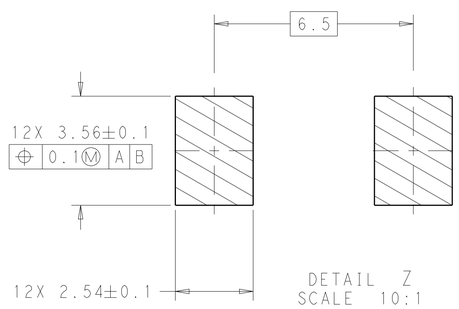


DETAIL Z
SCALE 10:1

THIS DRAWING IS A CONTROLLED DOCUMENT.

DIMENSIONS: mm

TOLERANCES UNLESS OTHERWISE SPECIFIED:
0 PLC ±0.1
1 PLC ±0.1
2 PLC ±0.1
3 PLC ±0.1
4 PLC ±0.1
ANGLES ±1°

MATERIAL 1
FINISH

DWN B. MATTHEWS 15NOV2011
CHK M. SCHMITT 15NOV2011
APVD M. SCHMITT 15NOV2011

PRODUCT SPEC 108-2364
APPLICATION SPEC 114-13120
WEIGHT -

TE Connectivity

NAME SFP+ ENHANCED 1X6 CAGE ASSEMBLY, PRESS FIT, EXTERNAL EMI SPRINGS WITH HEATSINK AND LIGHTPIPE

| SIZE | CAGE CODE | DRAWING NO | RESTRICTED TO |
|---|---|---|---|
| A1 | 00779 | C-2198236 | - |

Customer Drawing SCALE 4:1 SHEET 4 OF 4 REV A

4805 (3/11)