THIS DRAWING IS UNPUBLISHED. RELEASED FOR PUBLICATION –,– .
© COPYRIGHT – BY TYCO ELECTRONICS CORPORATION. ALL RIGHTS RESERVED.

LOC	DIST
AJ	16

REVISIONS

P	LTR	DESCRIPTION	DATE	DWN	APVD
	J	REVISED PER EC 0S14–0173–05	26JULY05	BM	JL

1. FOR USE WITH: BELDEN 8281, WE 724 & 3049 CABLES.
2. CRIMPING TOOL: 69652
3. SEE INSTRUCTION SHEET 408–1799–1.

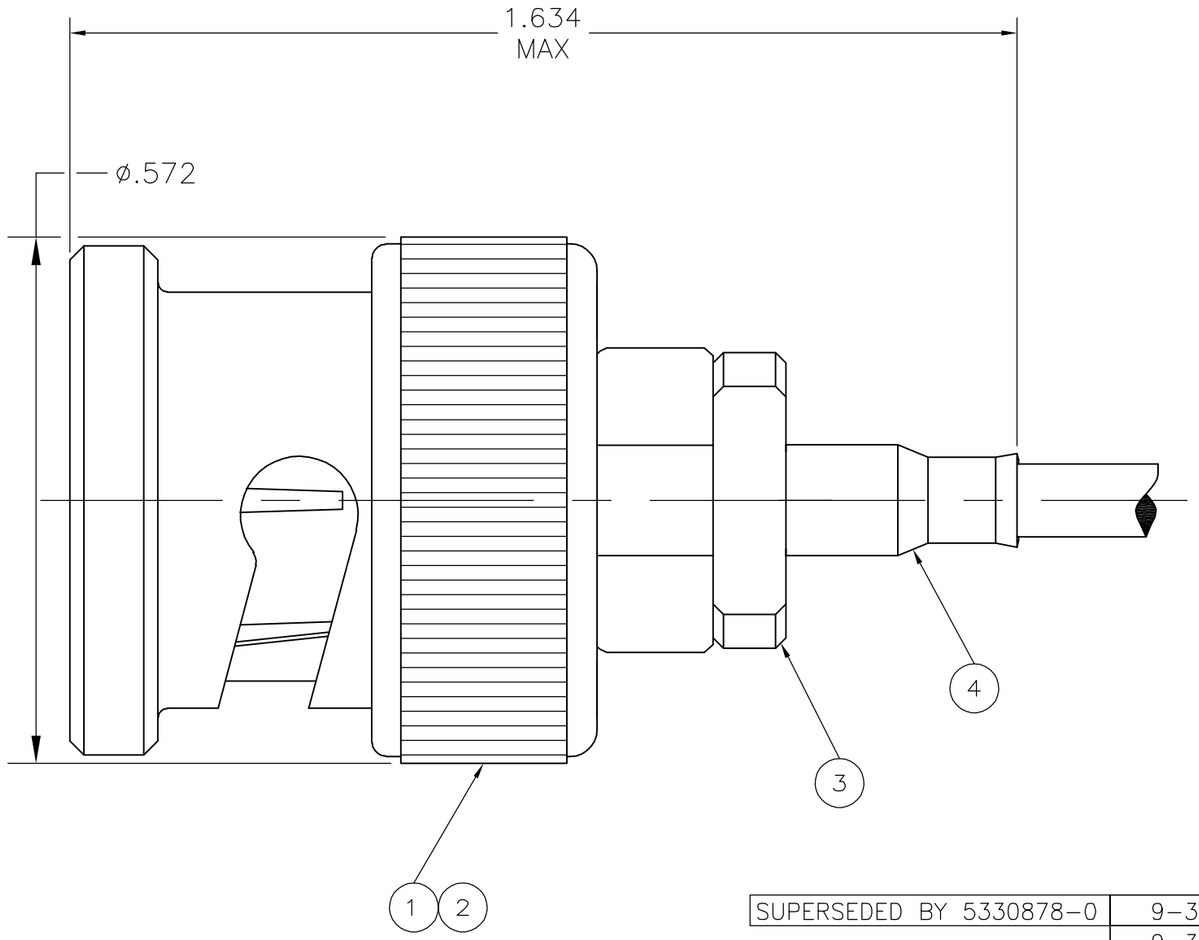

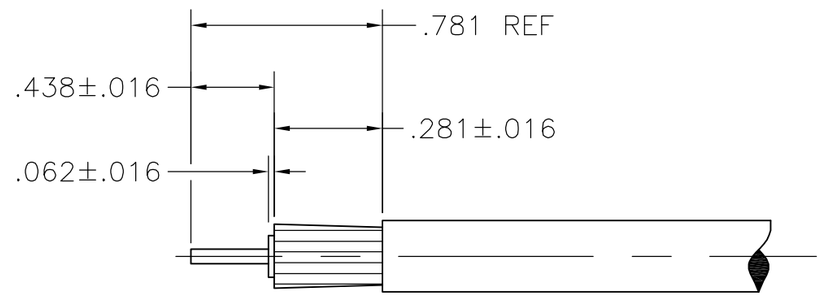

RECOMMENDED STRIP LENGTH

SUPERSEDED BY 5330878–0	9–331256–0	1–50780–7	2–329106–1	9–329327–0	9–330878–0
	9–331256–0	1–50780–7	2–329106–1	329327	330878
	4 FERRULE QTY=1	3 CRIMP END QTY=1	2 GASKET QTY=1	1 PLUG ASSEMBLY QTY=1	PART NUMBER

THIS DRAWING IS A CONTROLLED DOCUMENT.

DIMENSIONS: INCHES

TOLERANCES UNLESS OTHERWISE SPECIFIED:
0 PLC ± –
1 PLC ± –
2 PLC ± –
3 PLC ± –
4 PLC ± –
ANGLES ± –

MATERIAL

FINISH

DWN M. E. 05–24–83
CHK D. HEIDE 08–26–83
APVD G. M. 12–09–83
PRODUCT SPEC —
APPLICATION SPEC —
WEIGHT .458 OZ

tyco Electronics
Tyco Electronics Corporation
Harrisburg, Pa 17105–3608

NAME
CONNECTOR, COAXIAL
RF PLUG,
SERIES BNC

SIZE	CAGE CODE	DRAWING NO	RESTRICTED TO
A3	00779	C–330878	—

CUSTOMER DRAWING

SCALE	SHEET	REV
NTS	1 OF 1	J