THIS DRAWING IS UNPUBLISHED. RELEASED FOR PUBLICATION 20
© COPYRIGHT 20 BY - ALL RIGHTS RESERVED.

LOC	DIST	REVISIONS					
		P	LTR	DESCRIPTION	DATE	DWN	APVD
			A	FIRST VERSION	17DEC2014	GF	SM

NOTES :

1. MATERIALS AND FINISH:
   - HOUSING: PA66
   - CONTACTS: COPPER ALLOY, FINISH: TIN OVER NICKEL UNDERPLATE
   - SPRING: STAINLESS STRIP STEEL
2. MUST COMPLY WITH DIRECTIVE 2002/95/EC (ROHS)
3. WIRE TYPES AND SIZES ACCEPTED
   WIRE RANGE: 20AWG~26AWG.
   STRIP LENGTH: 9.5mm~10.5mm
4. PACKAGED IN TRAY.
5. CURRENT RATING: 6Amp AC150V.
6. OPERATION TEMPERATURE: −40°C TO +105°C

P/N: *−2834015−*

COLOR CODE:
1=GREEN
2=BLUE
3=BROWN
4=ORANGE
5=GREY
6=RED
7=YELLOW
8=PURPLE
9=WHITE
0=BLACK

SERIES CODE

PIN No:
2=2 POSN
3=3 POSN
4=4 POSN
5=5 POSN
6=6 POSN
7=7 POSN
8=8 POSN

REMARK: THE DIFFERENT COLORS COULD BE COMBINED TO THE NEW CONNECTOR P/Ns FOR CUSTOMER REQUEST.

PCB Layout

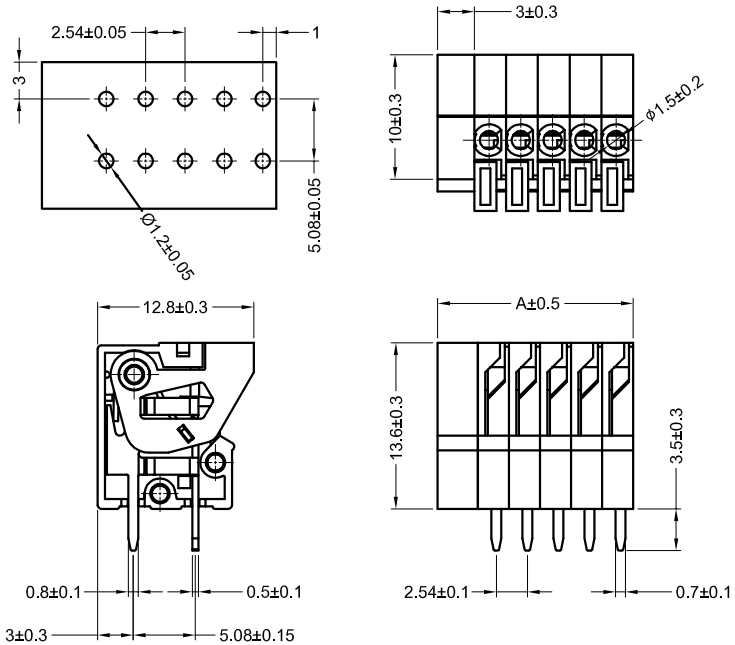

DETAIL INNER

A	NO. OF POSITIONS
23.32	8 POSN
20.78	7 POSN
18.24	6 POSN
15.70	5 POSN
13.16	4 POSN
10.62	3 POSN
8.08	2 POSN

THIS DRAWING IS A CONTROLLED DOCUMENT.

DIMENSIONS: mm

TOLERANCES UNLESS OTHERWISE SPECIFIED
0 PLC ±0.20
1 PLC ±0.15
2 PLC ±0.1
3 PLC ±
4 PLC ±
ANGLES ±2°

MATERIAL 1
FINISH 1

DWN GEORGE FU 14JAN2015
CHK SHI MING 14JAN2015
APVD XU XIANG 14JAN2015
PRODUCT SPEC 108-137079
APPLICATION SPEC 114-137079
WEIGHT -

TE Connectivity

NAME 2.54mm Pitch Modular Screwless Conn.

SIZE A2 | CAGE CODE 00779 | DRAWING NO C-2834015 | RESTRICTED TO -

CUSTOMER DRAWING | SCALE 1:1 | SHEET 1 OF 1 | REV A

1471-9 (3/1D)