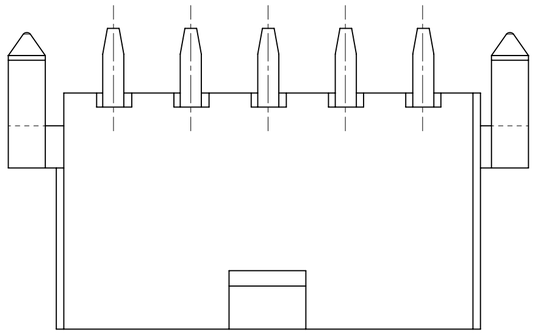

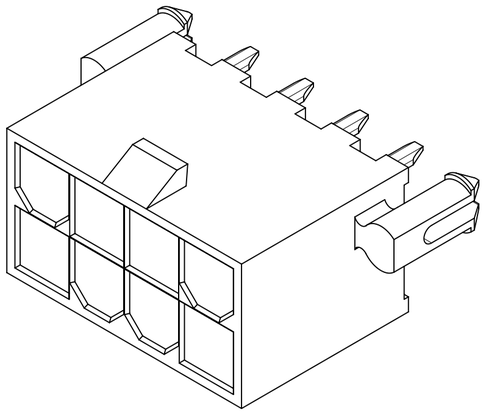

8 CKT SHOWN

CIRCUIT SIZE	DIM. "A"	DIM. "B"	DIM. "C"
2	.21 (5.4)	—	.370 (9.40)
4	.38 (9.6)	.17 (4.2)	.535 (13.60)
6	.54 (13.8)	.33 (8.4)	.701 (17.80)
8	.71 (18.0)	.50 (12.6)	.866 (22.00)
10	.87 (22.2)	.66 (16.8)	1.031 (26.20)
12	1.04 (26.4)	.83 (21.0)	1.197 (30.40)
14	1.20 (30.6)	.99 (25.2)	1.362 (34.60)
16	1.37 (34.8)	1.16 (29.4)	1.528 (38.80)
18	1.54 (39.0)	1.32 (33.6)	1.693 (43.00)
20	1.70 (43.2)	1.49 (37.8)	1.858 (47.20)
22	1.87 (47.4)	1.65 (42.0)	2.024 (51.40)
24	2.03 (51.6)	1.82 (46.2)	2.189 (55.60)

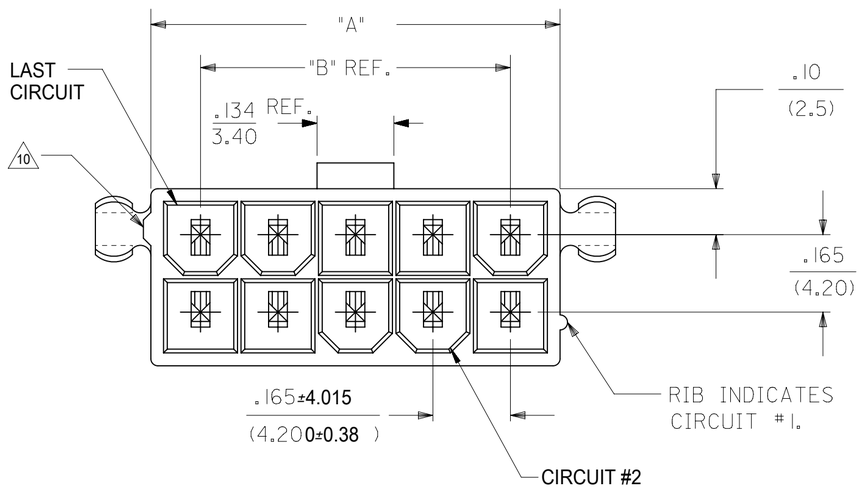

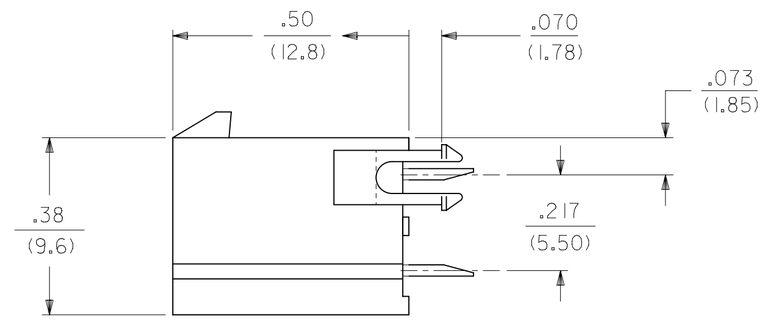

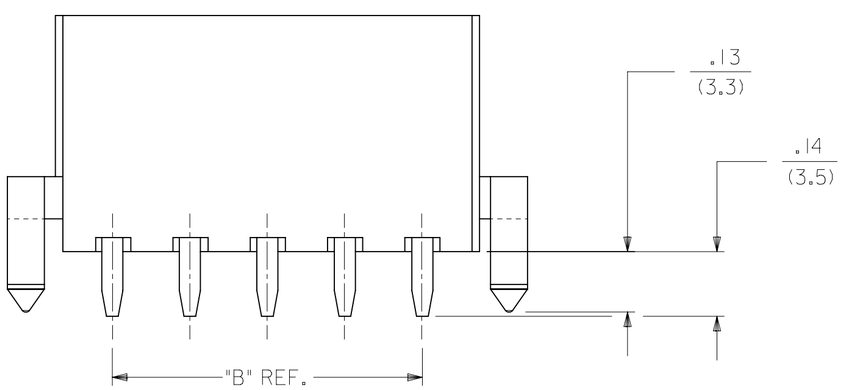

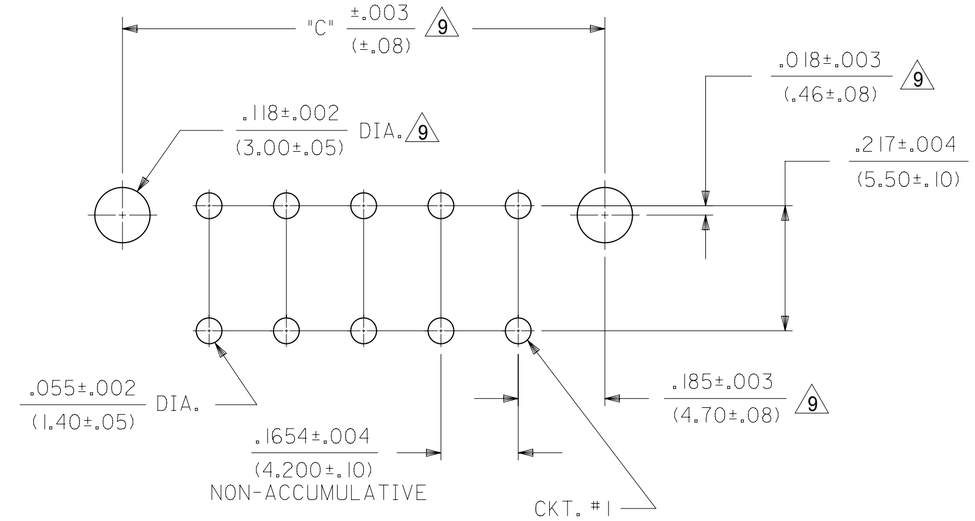

RECOMMENDED HOLE LAYOUT FOR .070/(1.78) MAX. THICK P.C. BOARD

VIEWED FROM COMPONENT SIDE

172447 - * * **

PLATING
SEE NOTE 2
0 = TIN
1 = GOLD

ASSEMBLY TYPE
0 = DUAL ROW W/ PEGS (BLACK)
1 = DUAL ROW W/ PEGS (BEIGE)
2 = DUAL ROW W/O PEGS (BLACK)
3 = DUAL ROW W/O PEGS (BIEGE)

CIRCUIT SIZE

RELEASE STATUS	P1	RELEASE DATE	04.04.2017 22:16:03

FORMAT: Eng-tega-master-tb-psize-C
REVISION: C
DATE: 2017/02/06

QUALITY SYMBOLS
EA = 0
EC = 0
EP = 0
▼ = 0
C = 0
☒ = 0
■ = 0
C = 0

ADD NAT P/N'S 2017/03/17
EC NO: 114701 2017/03/29
DRWN: CSLAFTER
CHK'D: JBELL 2017/04/04
APPR: FSMITH

A2 REV

GENERAL TOLERANCES (UNLESS SPECIFIED)

	MM	INCH
4 PLACES	±	±
3 PLACES	±	± 0.015
2 PLACES	± 0.38	± 0.02
1 PLACES	± 0.5	±
0 PLACES	±	±

ANGULAR TOL ± 0.5

DRAFT WHERE APPLICABLE MUST REMAIN WITHIN DIMENSIONS

THIS DRAWING CONTAINS INFORMATION THAT IS PROPRIETARY TO MOLEX ELECTRONIC TECHNOLOGIES, LLC AND SHOULD NOT BE USED WITHOUT WRITTEN PERMISSION

DIMENSION UNITS	SCALE
IN/MM	4:1

		DATE
DRWN BY	NNGUYEN	2014/04/22
CHK'D BY	JBELL	2014/04/22
APPR BY	FSMITH	2014/05/16

DRAWING SIZE: C

THIRD ANGLE PROJECTION

molex®

MINI-FIT VERT HDR ASSY
W & W/O PEGS DUAL ROW

PRODUCT CUSTOMER DRAWING

SERIES	MATERIAL NUMBER	CUSTOMER
172447	SEE CHART	GENERAL MARKET

DOCUMENT NUMBER	DOC TYPE	DOC PART	SHEET NUMBER
SD-172447-0000	PSD	001	1 OF 2

TOOLED	PART NUMBER	CKT SIZE	MOUNTING OPTION	PLATING SEE NOTE 2	COLOR
YES	172447-0002	2	WITH PEGS	TIN	BLACK
YES	172447-0004	4			
YES	172447-0006	6			
YES	172447-0008	8			
YES	172447-0010	10			
YES	172447-0012	12			
NO	172447-0014	14			
NO	172447-0016	16			
NO	172447-0018	18			
NO	172447-0020	20			
NO	172447-0022	22			
NO	172447-0024	24			

TOOLED	PART NUMBER	CKT SIZE	MOUNTING OPTION	PLATING SEE NOTE 2	COLOR
YES	172447-0202	2	WITHOUT PEGS	TIN	BLACK
YES	172447-0204	4			
YES	172447-0206	6			
YES	172447-0208	8			
YES	172447-0210	10			
YES	172447-0212	12			
YES	172447-0214	14			
YES	172447-0216	16			
NO	172447-0218	18			
NO	172447-0220	20			
NO	172447-0222	22			
NO	172447-0224	24			

TOOLED	PART NUMBER	CKT SIZE	MOUNTING OPTION	PLATING SEE NOTE 2	COLOR
YES	172447-1002	2	WITH PEGS	GOLD	BLACK
YES	172447-1004	4			
YES	172447-1006	6			
YES	172447-1008	8			
YES	172447-1010	10			
YES	172447-1012	12			
NO	172447-1014	14			
NO	172447-1016	16			
NO	172447-1018	18			
NO	172447-1020	20			
NO	172447-1022	22			
NO	172447-1024	24			

TOOLED	PART NUMBER	CKT SIZE	MOUNTING OPTION	PLATING SEE NOTE 2	COLOR
YES	172447-1202	2	WITHOUT PEGS	GOLD	BLACK
YES	172447-1204	4			
YES	172447-1206	6			
YES	172447-1208	8			
YES	172447-1210	10			
YES	172447-1212	12			
YES	172447-1214	14			
YES	172447-1216	16			
NO	172447-1218	18			
NO	172447-1220	20			
NO	172447-1222	22			
NO	172447-1224	24			

NOTES:
1. MATERIALS:
   HOUSING:
   NYLON, UL94 V-2, COLOR: SEE CHART, IEC 60335-1, 5th EDITION GLOW WIRE CAPABLE
   TERMINALS:
   BRASS
2. TERMINAL PLATING:
   GOLD =.000030/(0.00076) MIN. SELECT GOLD AND .000100/(0.00254) MIN. SELECT MATTE TIN OVER .000050/(0.00127) MIN. NICKEL OVERALL
   TIN =.000100/(0.00254) MIN. MATTE TIN OVER .000050/(0.00127) MIN. NICKEL
3. PRODUCT SPECIFICATION: PS-5556-001
4. PACKAGING: TRAY PACKED PER PK-5566-001
5. PART MATES WITH MINI-FIT JR. RECEPTACLE NO. 46992.
6. PART CONFORMS TO CLASS "B" REQUIREMENTS OF COSMETIC SPECIFICATION PS-45499-002 WITH THE EXCEPTION OF DISCOLORATION, FLASH AND SINK ON THE HOUSING MEET CLASS "C: REQUIREMENTS.
7. PART IS NOT DESIGNED FOR CURRENT SHARING.
8. PARTS ARE NOT DESIGNED TO BE MATED OR UN-MATED WHILE CIRCUITS ARE LIVE.
9. LOCATION OF .118.002/(3.000.05) DIAMETER HOLES ON P.C. BOARD IS FOR OPTIONAL PEGS.
10. ANTI-SHINGLING RIB MAY OR MAY NOT APPEAR ON HOUSINGS.

TOOLED	PART NUMBER	CKT SIZE	MOUNTING OPTION	PLATING SEE NOTE 2	COLOR
YES	172447-0102	2	WITH PEGS	TIN	BEIGE
YES	172447-0104	4			
YES	172447-0106	6			
YES	172447-0108	8			
YES	172447-0110	10			
YES	172447-0112	12			
NO	172447-0114	14			
NO	172447-0116	16			
NO	172447-0118	18			
NO	172447-0120	20			
NO	172447-0122	22			
NO	172447-0124	24			

TOOLED	PART NUMBER	CKT SIZE	MOUNTING OPTION	PLATING SEE NOTE 2	COLOR
YES	172447-0302	2	WITHOUT PEGS	TIN	BIEGE
YES	172447-0304	4			
YES	172447-0306	6			
YES	172447-0308	8			
YES	172447-0310	10			
YES	172447-0312	12			
YES	172447-0314	14			
YES	172447-0316	16			
NO	172447-0318	18			
NO	172447-0320	20			
NO	172447-0322	22			
NO	172447-0324	24			

TOOLED	PART NUMBER	CKT SIZE	MOUNTING OPTION	PLATING SEE NOTE 2	COLOR
YES	172447-1302	2	WITHOUT PEGS	GOLD	BIEGE
YES	172447-1304	4			
YES	172447-1306	6			
YES	172447-1308	8			
YES	172447-1310	10			
YES	172447-1312	12			
YES	172447-1314	14			
YES	172447-1316	16			
NO	172447-1318	18			
NO	172447-1320	20			
NO	172447-1322	22			
NO	172447-1324	24			

TOOLED	PART NUMBER	CKT SIZE	MOUNTING OPTION	PLATING SEE NOTE 2	COLOR
YES	172447-1102	2	WITH PEGS	GOLD	BEIGE
YES	172447-1104	4			
YES	172447-1106	6			
YES	172447-1108	8			
YES	172447-1110	10			
YES	172447-1112	12			
NO	172447-1114	14			
NO	172447-1116	16			
NO	172447-1118	18			
NO	172447-1120	20			
NO	172447-1122	22			
NO	172447-1124	24			

RELEASE STATUS	P1	RELEASE DATE	04.04.2017 22:16:03

QUALITY SYMBOLS
FA = 0
FC = 0
FD = 0
= 0
C = 0
= 0
= 0
V = 0

THIS DRAWING CONTAINS INFORMATION THAT IS PROPRIETARY TO MOLEX ELECTRONIC TECHNOLOGIES, LLC AND SHOULD NOT BE USED WITHOUT WRITTEN PERMISSION

EC NO: 114701 2017/03/17
DRWN: CSLAFTER 2017/03/29
CHK'D: JBELL 2017/04/04
APPR: FSMITH
ADD NAT P/N'S

A2 REV

GENERAL TOLERANCES (UNLESS SPECIFIED)

	MM	INCH
4 PLACES	±	±
3 PLACES	±	± 0.015
2 PLACES	± 0.38	± 0.02
1 PLACES	± 0.5	±
0 PLACES	±	±
ANGULAR TOL ± 0.5		

DRAFT WHERE APPLICABLE MUST REMAIN WITHIN DIMENSIONS

DIMENSION UNITS: IN/MM
SCALE: 1:1
DRWN BY: NNGUYEN DATE: 2014/04/22
CHK'D BY: JBELL DATE: 2014/04/22
APPR BY: FSMITH DATE: 2014/05/16
DRAWING SIZE: C
THIRD ANGLE PROJECTION

molex®

MINI-FIT VERT HDR ASSY
W & W/O PEGS DUAL ROW

PRODUCT CUSTOMER DRAWING

SERIES	MATERIAL NUMBER	CUSTOMER
172447	SEE CHART	GENERAL MARKET

DOCUMENT NUMBER	DOC TYPE	DOC PART	SHEET NUMBER
SD-172447-0000	PSD	001	2 OF 2

FORMAT: Eng-lega-master-tb-prod-C
REVISION: C
DATE: 2017/02/06