THIS DRAWING IS UNPUBLISHED. RELEASED FOR PUBLICATION 2008
© COPYRIGHT 2008 BY - ALL RIGHTS RESERVED.

LOC	DIST
E	B

REVISIONS

P	LTR	DESCRIPTION	DATE	DWN	APVD
	BA1	REVISED PER ECO-11-005150	29MAR2011	RK	HMR

1. DATE CODE
2. RESISTANCE CODE 2 DIGITS
3. CROSS SLOT FOR "0" BIT DRIVER, DEPTH: 0.45mm
4. FOR FURTHER INFORMATION SEE DATA SHEET FOR 3203 SERIES-SMD TRIMMERS

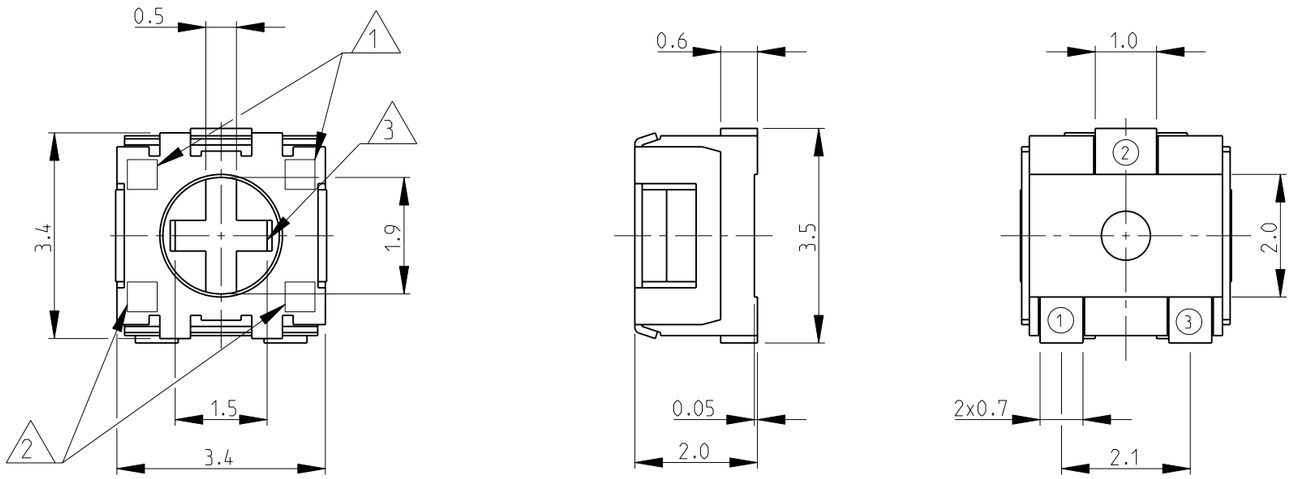

RoHS Compliant

RECOMMENDED LAND PATTERN

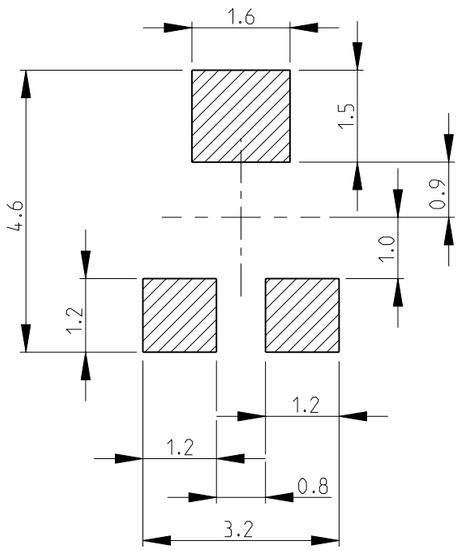

CIRCUIT DIAGRAM

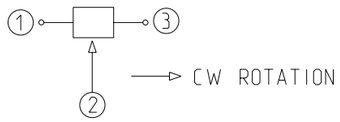

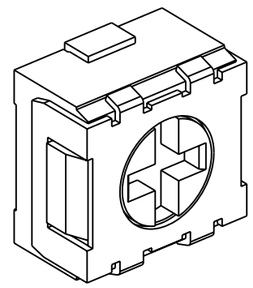

THIS DRAWING IS A CONTROLLED DOCUMENT.

DIMENSIONS: mm

TOLERANCES UNLESS OTHERWISE SPECIFIED:

0 PLC	± 0.2
1 PLC	± 0.1
2 PLC	± -
3 PLC	± -
4 PLC	± -
ANGLES	± 5°

MATERIAL -

FINISH -

DWN	SUBHASH.M	12-NOV-08
CHK	PRAKASH.S	12-NOV-08
APVD	STEPHEN.P	12-NOV-08

PRODUCT SPEC -

APPLICATION SPEC -

WEIGHT -

CUSTOMER DRAWING

TE Connectivity

NAME SMD TRIMMERS SERIES 3203 -

SIZE	CAGE CODE	DRAWING NO	RESTRICTED TO
A3	00779	C-1623916	-

SCALE 10:1 SHEET 1 OF 1 REV BA1

1470-19 (3/11)

Pro/ENGINEER DRAWING