THIS DRAWING IS UNPUBLISHED. RELEASED FOR PUBLICATION - , - .
© COPYRIGHT - By - ALL RIGHTS RESERVED.

| LOC | DIST |
|---|---|
| — | — |

REVISIONS

| P | LTR | DESCRIPTION | DATE | DWN | APVD |
|---|---|---|---|---|---|
| | S | REV PER ECO 13-009679 | 6-13-13 | CT | DM |

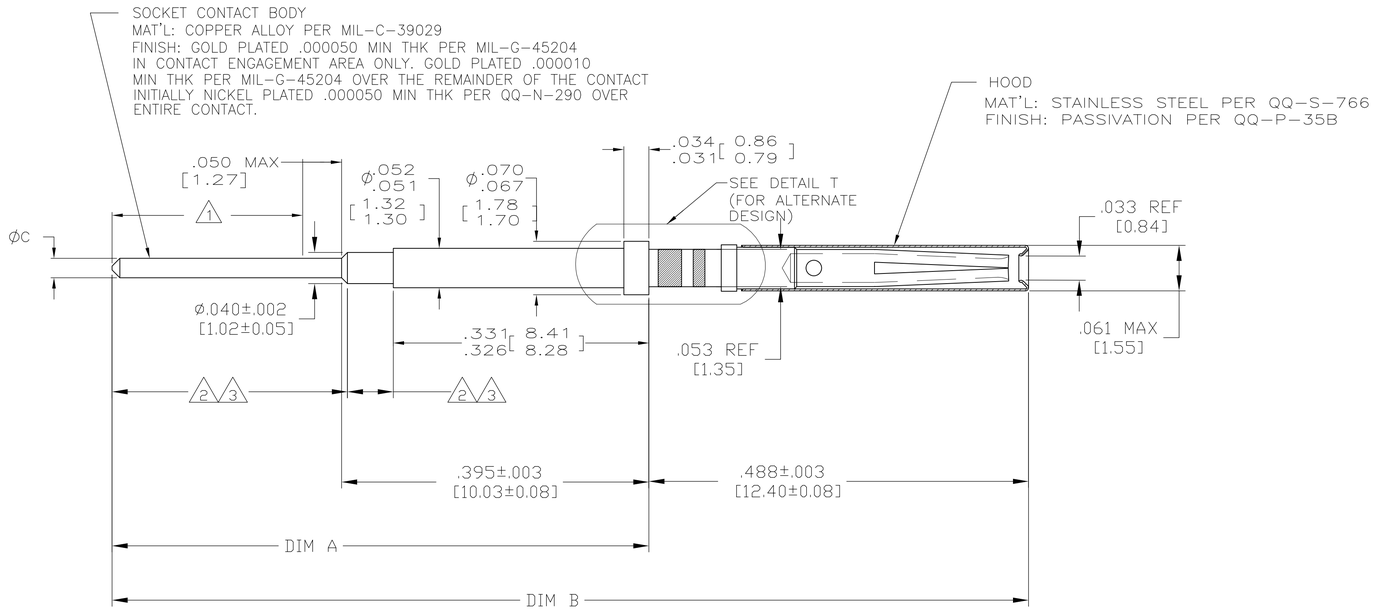


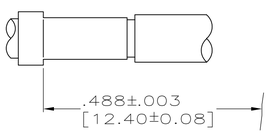


DETAIL T
ALTERNATE DESIGN

| REMARKS | MIN EXTENSION BEYOND INSERT | DIM C | DIM B | DIM A | PART NUMBER |
|---|---|---|---|---|---|
| 2 | .292 [7.42] | .024-.026 [0.61-0.66] | 1.216 [30.89] | .718 [18.24] | 2-211431-1 |
| | .292 [7.42] | .024-.026 [0.61-0.66] | 1.216 [30.89] | .718 [18.24] | 2-211431-0 |
| 3 | .375 [9.53] | .024-.026 [0.61-0.66] | 1.299 [32.99] | .801 [20.35] | 1-211431-9 |
| | .330 [8.38] | .024-.026 [0.61-0.66] | 1.244 [31.59] | .756 [19.20] | 1-211431-8 |
| 1 | .500 [12.70] | .024-.026 [0.61-0.66] | 1.424 [36.17] | .926 [23.52] | 1-211431-6 |
| 1 | .250 [6.35] | .024-.026 [0.61-0.66] | 1.174 [29.82] | .676 [17.17] | 1-211431-5 |
| 2 | .375 [9.53] | .024-.026 [0.61-0.66] | 1.299 [32.99] | .801 [20.35] | 1-211431-4 |
| 1 | .150 [3.81] | .024-.030 [0.61-0.76] | 1.074 [27.28] | .576 [14.63] | 1-211431-3 |
| - - | .155 [3.94] | .018-.021 [0.46-0.53] | 1.064 [27.03] | .576 [14.63] | 1-211431-0 |
| - - | .500 [12.70] | .024-.026 [0.61-0.66] | 1.424 [36.17] | .926 [23.52] | 211431-8 |
| - - | .375 [9.53] | .024-.026 [0.61-0.66] | 1.299 [32.99] | .801 [20.35] | 211431-6 |
| - - | .250 [6.35] | .024-.026 [0.61-0.66] | 1.174 [29.82] | .676 [17.17] | 211431-4 |
| - - | .150 [3.81] | .024-.026 [0.61-0.66] | 1.074 [27.28] | .576 [14.63] | 211431-2 |

1. THIS AREA SOLDER COATED WITH SN60 OR SN63 SOLDER TO WITHIN .050 [1.27] OF CHAMFER, .000060 [0.0015] MIN THICKNESS. (1-211431-3 & 1-211431-5 & 1-211431-6 ONLY. DIMENSIONS SHOWN APPLY BEFORE SOLDER COATING.
2. THIS AREA SOLDER COATED WITH SN60 OR SN63 SOLDER .000080 [0.0020 MIN THK. SOLDER PERMISSIBLE ON LARGE DIAMETER AS SHOWN. (1-211431-4 ONLY) DIMENSIONS SHOWN APPLY BEFORE SOLDER COATING.
3. THIS AREA SOLDER COATED WITH RoHs COMPLIANT SOLDER .000080 [0.0020] MIN THK. SOLDER PERMISSIBLE ON LARGE DIAMETER AS SHOWN. (1-211431-9 ONLY) DIMENSIONS SHOWN APPLY BEFORE SOLDER COATING.

THIS DRAWING IS A CONTROLLED DOCUMENT.

DIMENSIONS: INCHES [MM]

TOLERANCES UNLESS OTHERWISE SPECIFIED:
0 PLC ± -
1 PLC ± -
2 PLC ± -
3 PLC ± .005 [0.13]
4 PLC ± -
ANGLES ± -

MATERIAL: SEE CALLOUTS
FINISH: SEE CALLOUTS

DWN P.YEAGER 3-28-91
CHK A.SHARPE 3-30-91
APVD A.SHARPE 3-30-91
PRODUCT SPEC —
APPLICATION SPEC —
WEIGHT —

TE Connectivity

NAME: POSTED SOCKET CONTACT ASSY, NIC 600,ROUND,SIZE 22, FRONT RELEASE

| SIZE | CAGE CODE | DRAWING NO | RESTRICTED TO |
|---|---|---|---|
| A1 | 00779 | C-211431 | — |

CUSTOMER DRAWING | SCALE 10:1 | SHEET 1 OF 1 | REV S

4805 (3/11)