LOADING PATTERN MATING SIDE

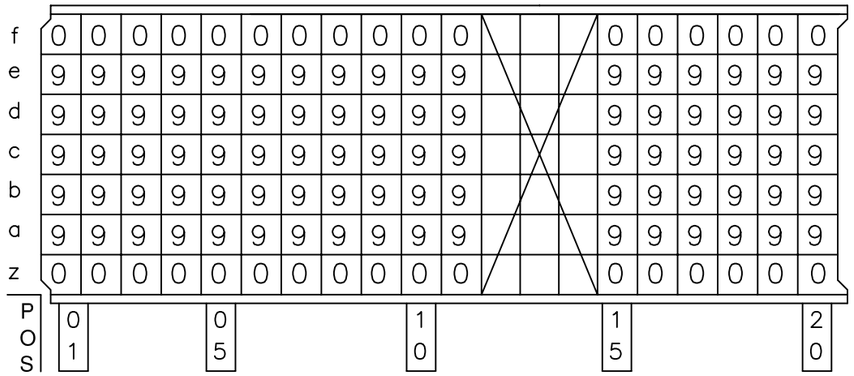

LOADED CONNECTOR ASSEMBLY
(FOR EXAMPLE)

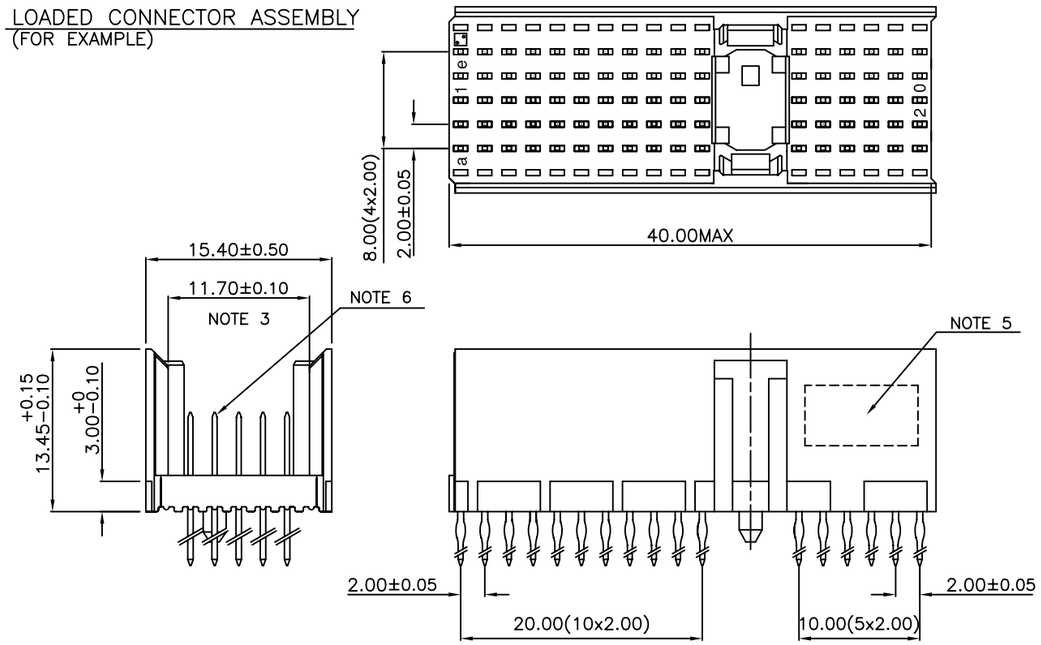

CONTACT OVERVIEW

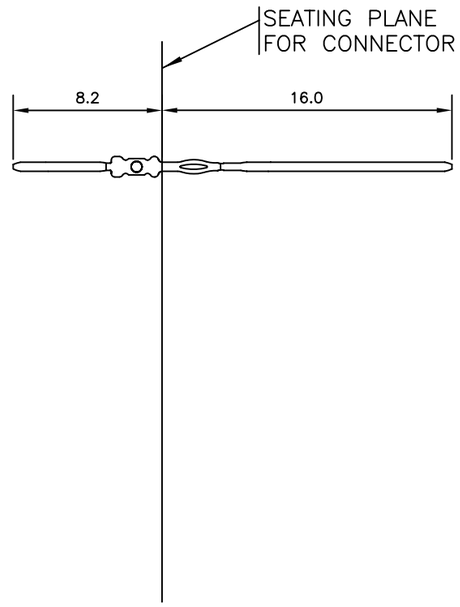

LAY-OUT P.C.B.-HOLE

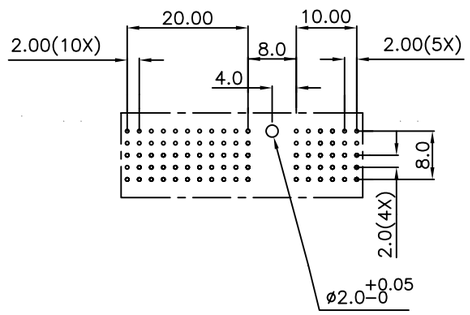

HM2P28PN5110-- --

LEAD FREE INDICATOR : LF = LEAD FREE
(DIGIT 15 & 16)

PLATING CODE (DIGIT 13 AND 14)
(REF DRW NO. BS,C , 201844 , 003)

NOTES

1. THIS PRODUCT IS CSA APPROVED.
2. THIS PRODUCT IS UL RECOGNIZED.
3. MEASURED AT THE BOTTOM.
4. MATERIAL CONTACT: PHOSPHORBRONZE
   HOUSING: CREAM WHITE GLASS FILLED POLYESTER UL-94V0
5. CONNECTOR PRINTED WITH P/N AND DATE CODE.
6. FOR ACTUAL CONTACT LOADINGS, SEE LOADING PATTERN MATING SIDE.
7. SHAPE OF CONNECTOR HOUSING CAN ALTER DEPENDING ON PRODUCTION LOCATION
8. THE PRODUCT (LF) MEETS EUROPEAN UNION DIRECTIVES AND OTHER COUNTRY REGULATIONS AS DESCRIBED IN GS-22-008
9. FOR RECOMMENDED PTH DIMENSIONS REFER DRAWING : BS, A , 201572 , 001

CATALOG NO: HM2P28PN5110----

ltr	ecn no	dr	date
A	103-0008	JAY	2003-05-22
B	103-0063	MINI	2003-01-12
C	105-0171	MINI	2005-09-23
D	106-0077	MINI	2006-06-17
E	111-0112	MINI	2011-06-07

dr	JAYADEEP P	2003-05-22
engr	BIJU K PAUL	2003-05-22
chr	ALEX BABU	2011-06-07
appd	ALEX BABU	2011-06-07

mat'l. code: SEE NOTE 4
surface: ISO 1302
tolerance: ISO 406 ISO 1101
tolerances unless otherwise specified: angles 0°±1°; linear .0±0.2, .00±0.1
projection
MM
scale —

product family: MILLIPACS
title: MPACS 5+2R STR HDR PF CONN TYPE A 11+ 6 POS.
dwg no: BS, C ,203028, 009
sheet 1 of 1
size: A3
type: Product Customer Drawing

sheet index — revision: E; sheet: 1

form: A3

PDM: Rev:E STATUS:Released Printed: Jun 12, 2011

FCIconnect.com
Copyright FCI