cannon

PL Series

Plastic Push Pull Interconnects

ITT

ENGINEERED FOR LIFE

We Connect

When it matters most

For more than a century, ITT Cannon has developed innovative interconnect solutions for the world's most critical applications. With facilities in the United States, Germany, Italy, Mexico, China and Japan, each with its unique strengths, we offer our customers interconnect solutions that are truly Engineered for Life.

In addition to this truly global footprint, we offer highly specialized, segmented industry expertise. We have a proven track record as an industry leader in medical and industrial applications. This has equipped us with the knowledge needed to continue to produce the most advanced, resilient and reliable connectors for our customers' most challenging conditions.

Connecting the world's most important information with those who need it.

Drawing upon nearly 50 years of global presence in the medical industry, ITT Cannon represents a committed partner to medical equipment manufacturers, bringing connector solutions to the applications that help change lives every day.

The ITT Cannon difference

- Global capabilities & local support
- Proven application expertise
- A century of interconnect leadership
- A committed innovator & business partner

About ITT

ITT is a diversified leading manufacturer of highly engineered critical components and customized technology solutions for the energy, transportation and industrial markets. Building on its heritage of innovation, ITT partners with its customers to deliver enduring solutions to the key industries that underpin our modern way of life. Founded in 1920, ITT is headquartered in White Plains, N.Y., with employees in more than 35 countries and sales in a total of approximately 125 countries. For more information, visit www.itt.com.

ITT Cannon Push Pull PL Series

cannon

The ITT Cannon PL Series of plastic push pull interconnects is a high quality, versatile and cost effective solution for challenging medical and industrial applications where miniaturized, lightweight and durable connectors are critical to operating performance.

ITT Cannon's PL Series is a 'Plastic Latching' push pull connector that delivers the ultimate in performance when it matters most. Available in 2 to 14 way variants, with durability in excess of 2,000 mating cycles and with 6 keying options and 7 color codings the PL Series is an extremely versatile solution for a wide variety of both disposable and reusable applications.

Cannon's integrated cable assembly solutions combined with intermateability with existing push pull industry solutions ensures the PL Series is the ultimate choice for today's critical applications.

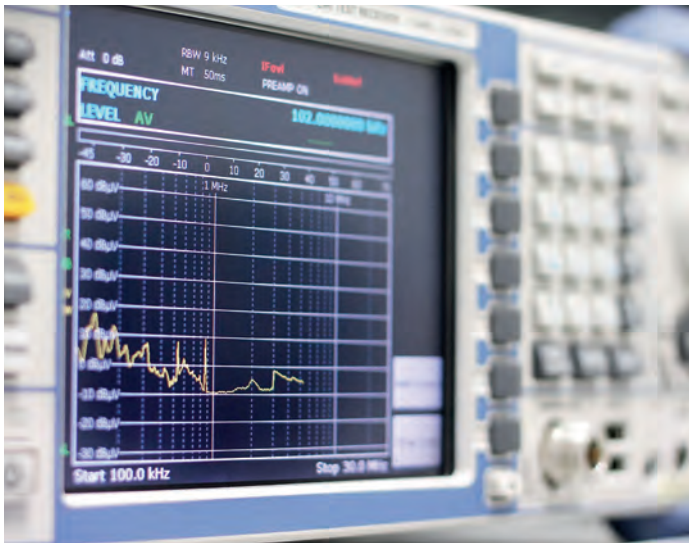

Key features

- Innovative self-latching mechanism enables quick and simple mating & un-mating
- Medical grade quality – lightweight and ruggedized
- 6 keying and 7 color coding options enables wide customization
- Available in 2 to 14 way variants
- Accommodates cable sizes ø 2.7 to 6.5 mm
- Fully sterilizable – by gas or steam
- Value added cable assembly solutions available
- Intermateable with existing industry solutions

Applications

- Medical
  - Electrosurgery tools
  - ECG devices
  - Catheters
  - Sensors
  - Respirators
  - Defibrillators
  - Dental tools
- Industrial electronics
- Test and measurement

ITT
ENGINEERED FOR LIFE

PL Series product overview

PL Series performance data

Operating temperature range	PSU: -50 to 150° C (Standard offering) PEI: -50 to 170° C (Contact ITT Cannon)
Current rating	2 to 10A
Insulation resistance	10^{12} Ω
Voltage	0.6 to 1.2 kV rws

Ingress protection	IP50
Durability	In excess of 2,000 cycles
Sterilization capability	Can be sterilized by gas or steam
Certifications	UL Certified RoHS compliant

PL Series Push Pull latching system.

1. The push-pull locking system is widely used for quick and easy mating and un-mating.

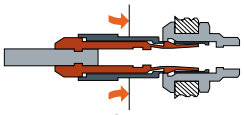

2. To mate the connectors simply push the plug into the socket.

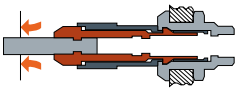

3. Once the connectors are mated, they cannot be un-mated by pulling on parts other than the release sleeve of the outer shell.

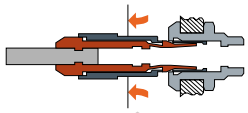

4. To un-mate the connectors, simply pull the release sleeve of the outer shell.

Exploded view of PL Series

Straight plug					
	Backnut	Cable Collet	Insulator & Contacts	Shell	
Straight plug with bend relief					
	Bend Relief	Bend Relief for a Backnut	Cable Collet	Insulator & Contacts	Shell
Receptacle with back panel mounting					
	Hexagonal Nut	Shell	Front Nut		
In-line receptacle					
	Backnut	Cable Collet	Insulator & Contacts	Shell	
In-line receptacle with bend relief					
	Bend Relief	Bend Relief for a Backnut	Cable Collet	Insulator & Contacts	Shell

PL Series part number system

cannon

Straight plug and inline receptacle

PL	XX	X	X	X	X	X	XX

Push pull plastic

Straight plug
In-line receptacle
A1= straight plug with cable collet ---- solder contact
A3= straight plug with cable collet and nut for fitting a bend relief ---- solder contact
C1= In-line receptacle with cable collet ---- solder contact
C3= In-line receptacle with cable collet and nut for fitting a bend relief ---- solder contact

Outer shell material:
G= Grey PSU(standard) F= Black PEI
B= Black PSU P=Grey PEI

Back nut color:
0= Black 1= White 2= Red 4= Yellow 5= Green 6= Blue 8= Grey

For A3 and C3 the Back nut is only available in Grey (8)

Number of contacts:
02= 2Pin 03= 3Pin 04= 4Pin
05= 5Pin 06= 6Pin 07= 7Pin
08= 8Pin 09= 9Pin 10= 10Pin
14= 14Pin

Coding:
0= 0° (standard)
A= 40° C=60°
E= 80° H= 170° J=205°

Cable collet:
1=ø3.9mm (cable ø=2.7~3.9mm)
2=ø5.2mm (cable ø=4.0~5.2mm)
3=ø6.5mm (cable ø=5.3~6.5mm)

Contact plating:
2= Gold plating 20u''

For A3 and C3 type, please order bend relief separately.

Receptacle

PL	XX	X	X	X	X	X	XX

Push pull plastic

Receptacle
B1= Receptacle with two nuts
(back panel mounting) ----solder contact
B3= Receptacle with two nuts,
(back panel mounting) ----with 90 degree
PCB contact
B4= Receptacle, front nut fixing ----solder contact

Outer shell material:
G= Grey PSU(standard) F= Black PEI
B= Black PSU P=Grey PEI

Front nut color:
0= Black 1= White 2= Red 4= Yellow
5= Green 6= Blue 8= Grey

Number of contacts:
02= 2Pin 03= 3Pin 04= 4Pin
05= 5Pin 06= 6Pin 07= 7Pin
08= 8Pin 09= 9Pin 10= 10Pin
14= 14Pin

Coding:
0= 0° (standard)
A= 40° C=60°
E= 80° H= 170° J=205

Cable collet:
0= no cable collet

Contact plating:
2= Gold plating 20u''

Bend relief

PL	BR	X	XXX0

Push pull plastic

Bend relief

Color:
0= Black 2= Red 3= White 4= Yellow 5= Green 6= Blue 8= Grey

Cable n (mm)		
	Min	Max
025	>2.5	3
030	>3.0	3.5
035	>3.5	4
040	>4.0	4.5
045	>4.5	5
050	>5.0	5.5
055	>5.5	6
060	>6.0	6.5

Dimensions shown in mm

ITT
ENGINEERED FOR LIFE

PL Series straight plug and receptacles

Straight Plug

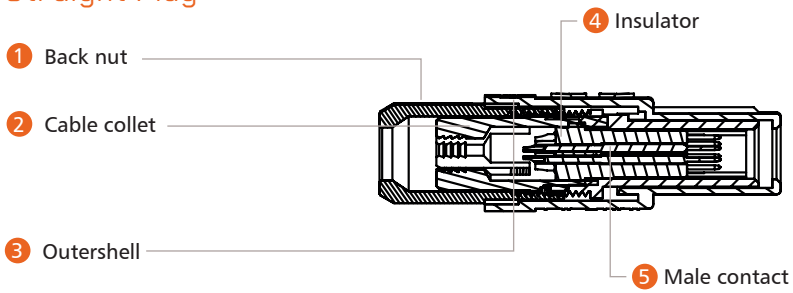

Receptacle

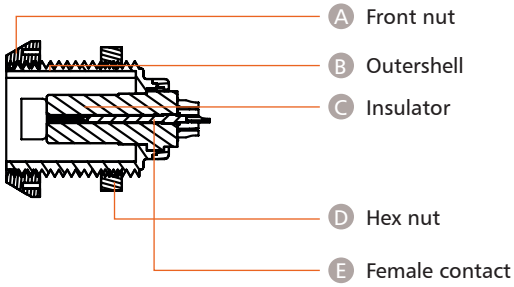

A1 Straight plug with cable collet

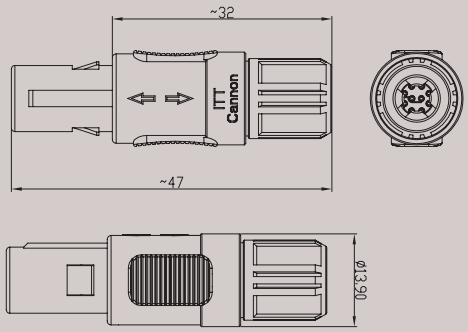

A3 Straight plug with cable collet and nut for bend relief

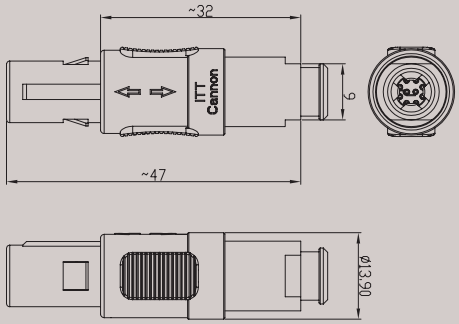

B1 Receptacle with two nuts

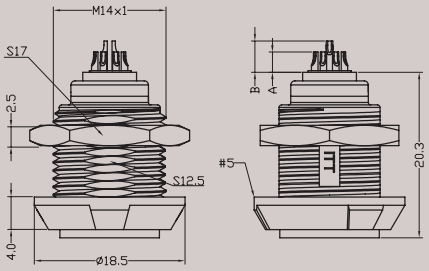

Number of Contacts	Dimensions	
	A	B
02	2.5	-
03		-
04		-
05		-
06		-
07		3.9
08		3.9
09		3.9
10		3.9
14		3.9

Solder to board and crimp contacts are available. Contact ITT Cannon for details.

Dimensions shown in mm

PL Series receptacles

B3 Receptacle with 90˚contacts

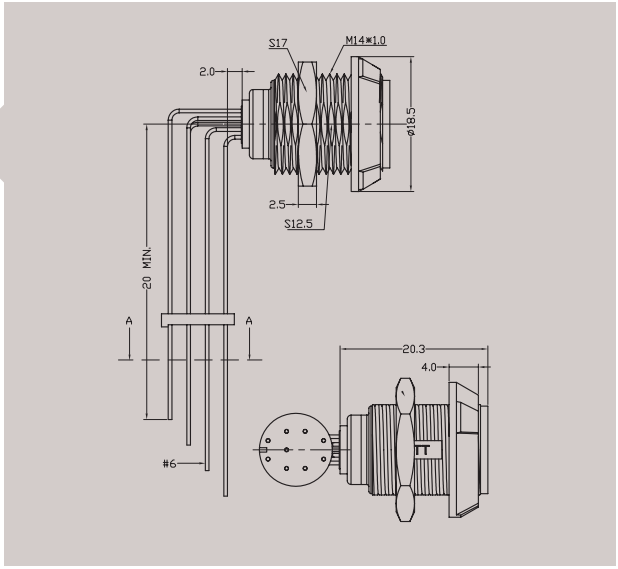

Number of Contacts	Dimensions	
	A	B
02	2.5	-
03		-
04		-
05		-
06		-
07		3.9
08		3.9
09		3.9
10		3.9
14		3.9

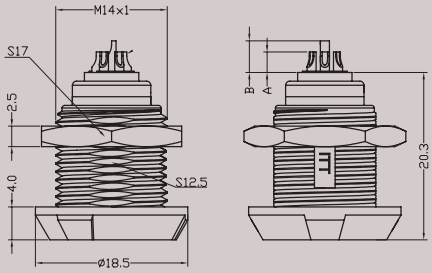

Solder to board and crimp contacts are available. Contact ITT Cannon for details.

B4 Receptacle with nut fixing

C1 In-line receptacle with with cable collet

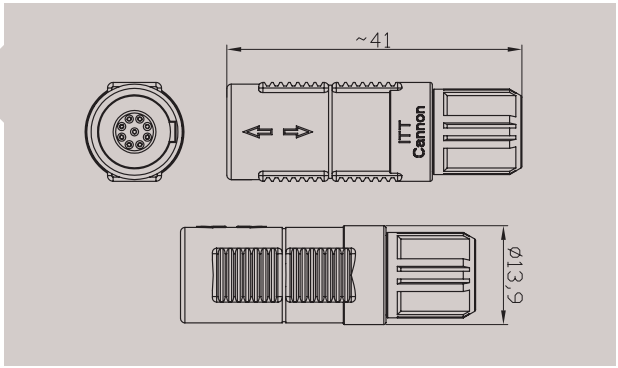

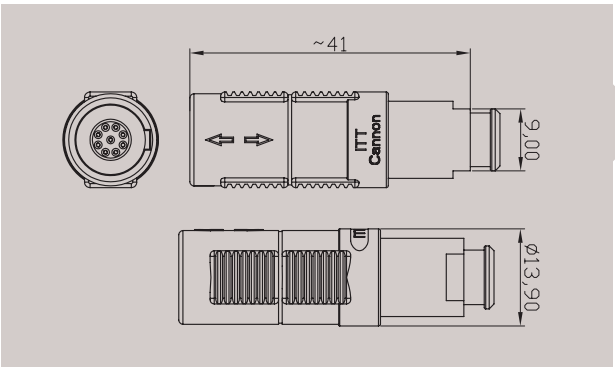

C3 In-line receptacle for bend relief

Dimensions shown in mm

ITT
ENGINEERED FOR LIFE

PL Series bend relief and housing models

Bend Relief

Material: silicone
Temperature range :-50~200°C

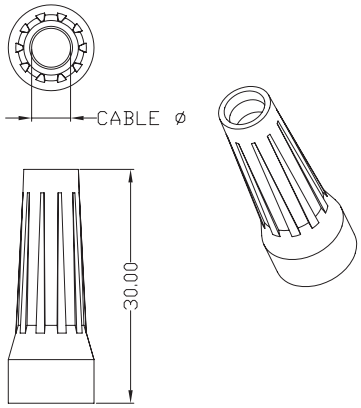

Part Number	Cable Ø (mm)	
	Min.	Max.
025	>2.5	3.0
030	>3.0	3.5
035	>3.5	4.0
040	>4.0	4.5
045	>4.5	5.0
050	>5.0	5.5
055	>5.5	6.0
060	>6.0	6.5

Colour Code	0	2	3	4	5	6	8
Colour	Black	Red	White	Yellow	Green	Blue	Grey

Housing Models

STRAIGHT PLUGS

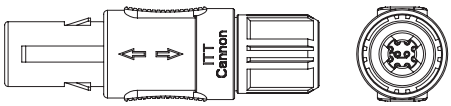

A1

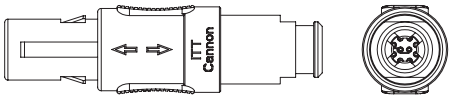

A3

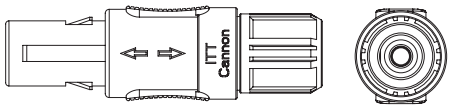

FLUIDIC PLUG

RECEPTACLE

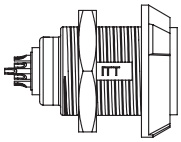

B1

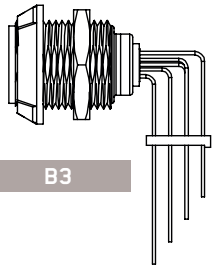

B3

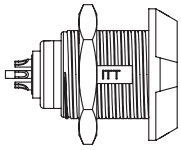

B4

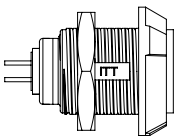

BE

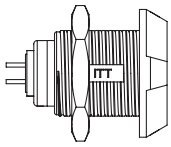

BF

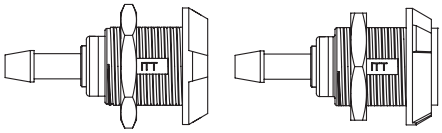

FLUIDIC RECEPTACLE

IN-LINE RECEPTACLE

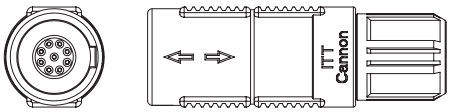

C1

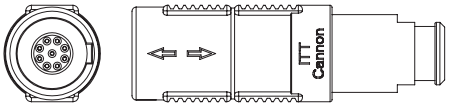

C3

For fluidic, BE and BF options please contact ITT Cannon.

Dimensions shown in mm

PL Series product options

cannon

Insert Configurations

Number of contacts		02	03	04	05	06	07	08	09	10	14
View from termination side	Male										
	Female										
Test voltage (kv rms)		1.2	1.2	1.2	1.05	1.05	1.05	1.05	0.85	0.85	0.6
Rated current		10	10	8	7	6	5	5	3	3	2
Creepage and clearance (mm) distance		1.3	1.3	1.2	0.8	0.85	0.85	0.6	0.65	0.5	0.5
Max, AWG		20	20	22	22	26	26	26	28	28	28
Solder bucket Ø(mm)		1.1	1.1	0.85	0.85	0.65	0.65	0.65	0.45	0.45	0.45
Contact Ø(mm)		1.3	1.3	0.9	0.9	0.7	0.7	0.7	0.5	0.5	0.5

Alignment Key

Part Number						
CODING	0	A	C	E	H	J
PLUG FRONT VIEW						

Color Coding

Part Number						
Front and back nut colors						
0=Black	1=White	2=Red	4=Yellow	5=Green	6=Blue	8=Grey

Outer Shell Material

Part Number		
Material	PSU	PEI
Temperature	-50° / +150°C	-50° / +170°C
Part number	G=Grey PSU	F=Black PEI
	B=Black PSU	P=Grey PEI

Gold Plating

Part Number
2=Gold plated 20u”

Contact Diameter

Part Number
1=Ø1.3mm (only for 2; 3 pin)
2=Ø0.9mm (only for 4; 5 pin)
3=Ø0.7mm (only for 6; 7; 8 pin)
4=Ø0.5mm (only for 9; 10; 14pin)

Cable Collet

Part Number
1=Ø3.9mm (Cable Ø=2.7~3.9mm)
2=Ø5.2mm (Cable Ø=4.0~5.2mm)
3=Ø6.5mm (Cable Ø=5.3~6.5mm)
0=No cable collet (B type only)

Dimensions shown in mm

PL Series PCB drilling detail

For 90° Elbow contacts,see from A-A view.

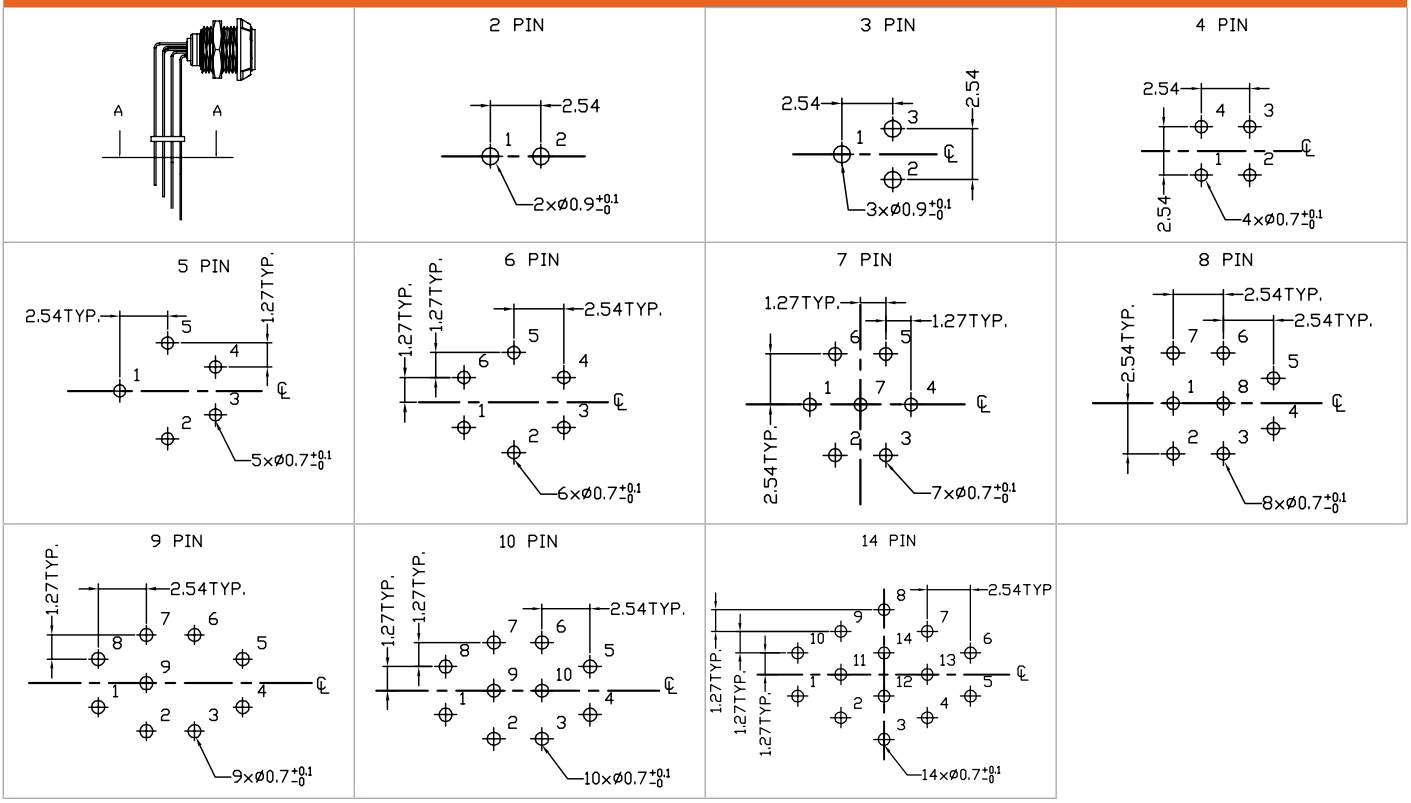

For straight contacts

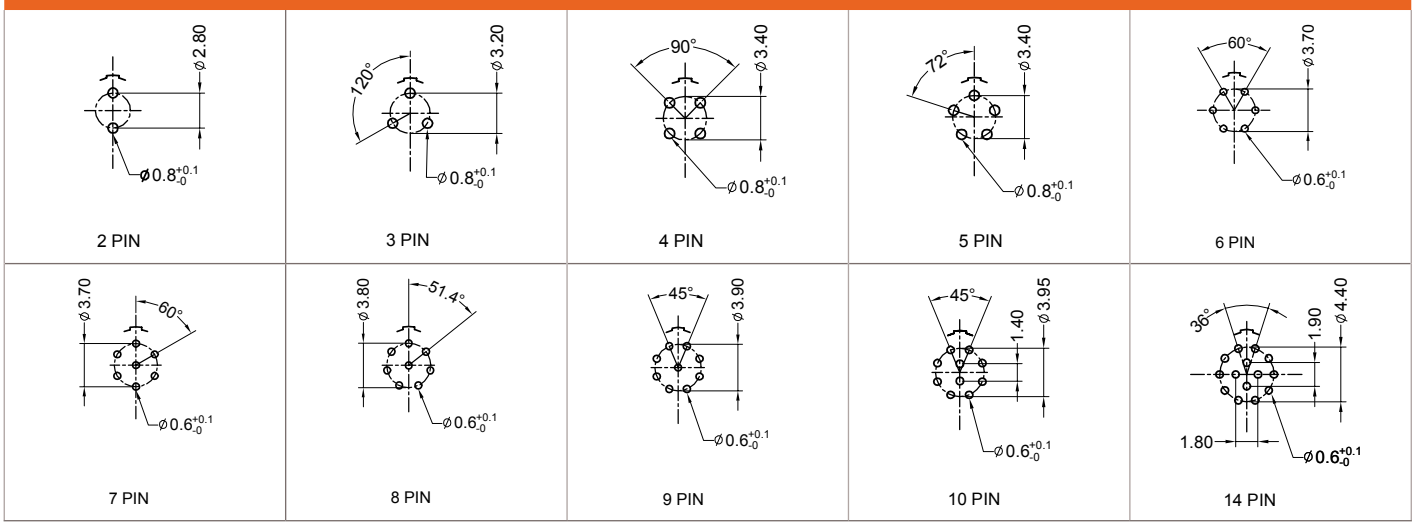

Panel Cutout

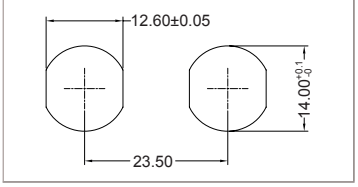

Dimensions shown in mm

Additional advanced, resilient and reliable solutions from ITT Cannon

DL

The DL Series of Zero Insertion Force (ZIF) connectors are high performance, multiple-wire power and signal connectors with a minimum rated life of 10,000 mating cycles.

QLC

The miniaturized QLC series is a durable, highly reliable and easily assembled high pin count connector solution for today's portable medical and industrial applications.

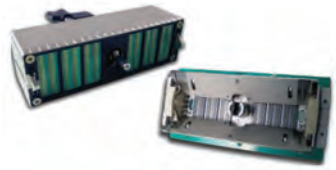

DLP

The DLP series of connectors provide extremely reliable performance with minimized signal paths and crosstalk as the innovative design ensures receptacle contacts mate directly to the PCB.

Universal Contact

The UC series has a singular contact design which exhibits over 0.3N of force with only 0.1mm of deflection and provides the ultimate dry circuit pressure contact for commercial and handheld applications.

APD

APD is a full-plastic, proven bayonet series with IP69K sealing and color and mechanical coding that is an ideal solution for critical environments that require high sealing grades.

Customized Cable Assemblies

ITT Cannon has value added cable assembly capabilities at its global engineering centers and the proven expertise to partner with customers to develop specialized assemblies for any application.

ITT
ENGINEERED FOR LIFE

Connect with your ITT Cannon representative today or visit us at www.ittcannon.com

Connect with the experts

ITT Cannon is a world leader in the design and manufacture of highly engineered solutions for multiple end markets.

ENGINEERED FOR LIFE

North America

56 Technology Drive
Irvine, CA 92618
Phone +1.800.854.3028

100 New Wood Road
Watertown, CT 06795
Phone: +1.860.274.9681

Europe

Italy
Corso Europa 41/43
I - 20020 Lainate (MI) Italy
Phone: +39.02938721

Germany
Cannonstrasse 1
71384 Weinstadt, Germany
Phone: +49.7151.699.0

Asia

Hong Kong
Units 2405-6, 24/F, ING Tower
308 Des Voeux Road Central, Hong Kong
Phone: +852.2732.2720

The "ITT Engineered Blocks" symbol, "Engineered for life", "ITT", "Veam" and "Cannon" are registered trademarks of ITT Inc.
Specification and other data are based on information available at the time of printing, and are subject to change without notice.

© 2016 ITT Inc.

ITT Cannon PL BR 0416