TS-24BYJ48A-25 STEPPING MOTOR

ITEM	Specification Condition
NO. of Phase	4
Step Angle	5.625°/25
Operating Voltage	DC 5V (Terminal Voltage)
Excitation	1-2 Phase Excitation.
Winding Resistance	120±10%Ω At 25℃
Pull-In Torque	200g.cm min ,100pps DC5V
Stepping Accuracy	5.625°±7%
Pull In Rate	600pps min
Moderating Ratio	1/25

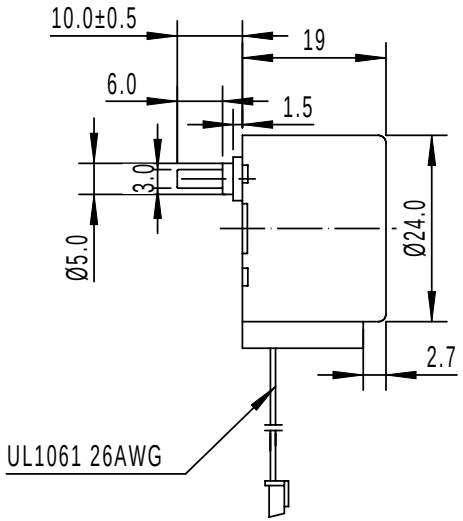

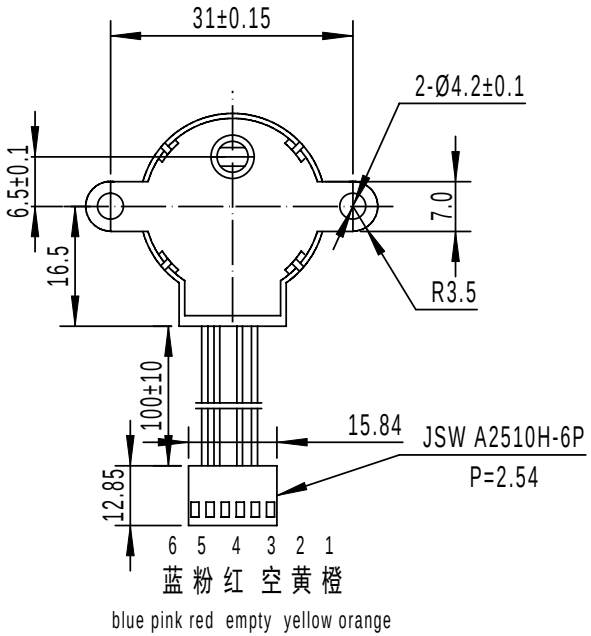

lable

TS-24BYJ48A-25
5VDC 120Ω 1:25

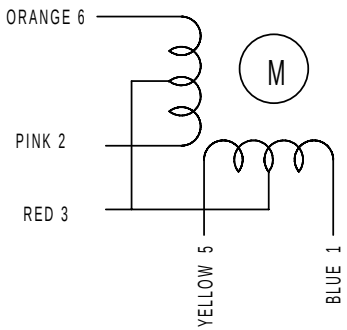

TITLE: TS-24BYJ48A-25	Customer No:	Drafted By: kevin wang
		Checked By:
Dwg.NO:JL-120-25A	Date: 2015.04.11	Approved By:
TT MOTOR (HK) INDUSTRAIL CO.,LTD	Scale: 1:1	Units: mm / EDITION No: A
		Angular: =1° Decimal: X.XX ±0.05 / X.X ±0.2 / X ±0.3