THIS DRAWING IS UNPUBLISHED. RELEASED FOR PUBLICATION - ,- .
© COPYRIGHT - By - ALL RIGHTS RESERVED.

LOC	DIST
CM	00

REVISIONS

P	LTR	DESCRIPTION	DATE	DWN	APVD
	P2	REVISED PER ECR-12-011660	31JAN13	KH	TM

1 PARTS COMPLY TO AMP SOLDERABILITY SPECIFICATION 109-11-3.

2 CIRCUIT IDENTIFICATION CHARACTERS ARE ADJACENT TO THE INDICATED CAVITIES, BUT LOCATION AND ORIENTATION MAY DIFFER FROM PRINT.

3 CONTACT IS PLATED OVERALL WITH 0.00127 [.000050] NICKEL THEN 0.00076 [.000030] GOLD OVER CONTACT LENGTH INDICATED AND MATTE TIN LEAD ON SOLDER TAIL END.

4 DIMENSIONS IN BRACKETS ARE IN INCHES.

5 CONTACT IS PLATED OVERALL WITH 0.00127 [.000050] NICKEL THEN 0.00076 [.000030] GOLD OVER CONTACT LENGTH INDICATED AND MATTE TIN ON SOLDER TAIL END.

6 SUPERSEDED BY 641964-3

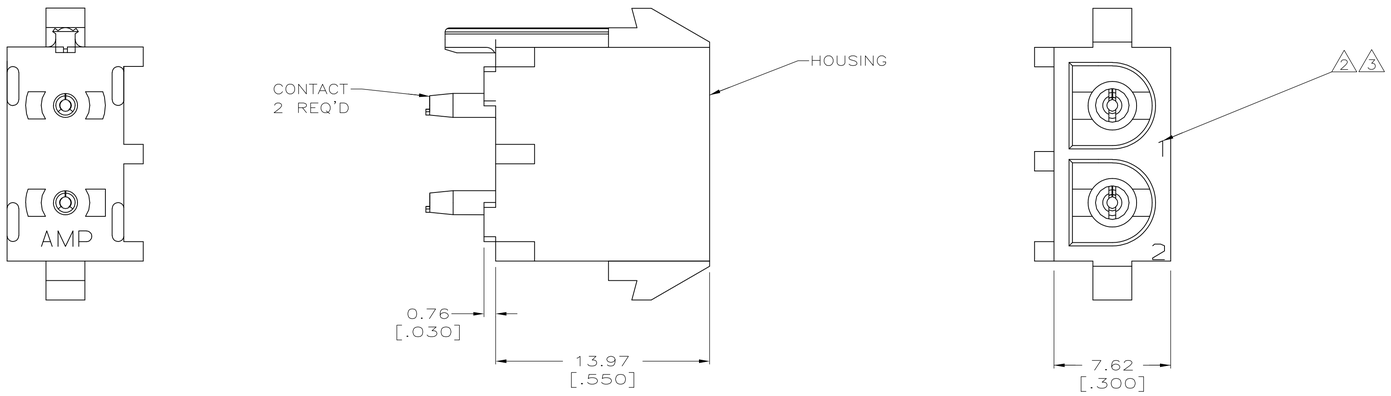

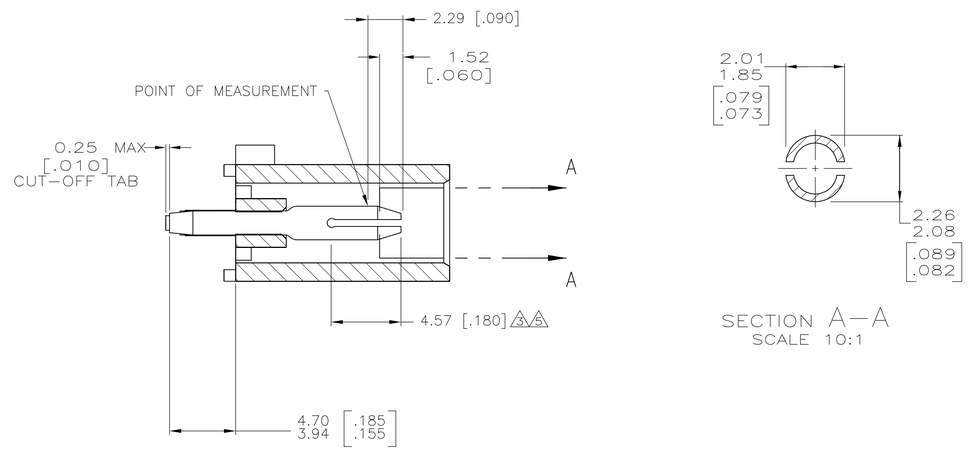

SECTION A-A
SCALE 10:1

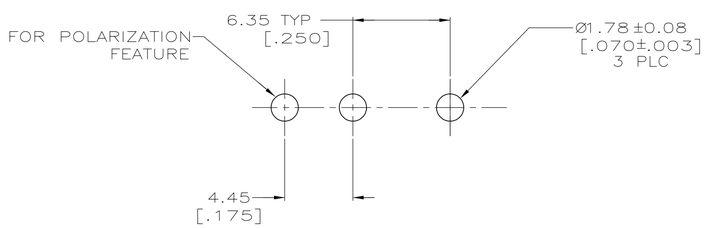

RECOMMENDED MOUNTING HOLE PATTERN
FOR 1.57 [.062] THICK P.C. BOARD

PIN CONTACT MATERIAL AND FINISH	HOUSING MATERIAL	PART NUMBER
PHOSPHOR BRONZE, 5	NYLON,UL94V-0,WHITE	641964-3
PHOSPHOR BRONZE, 3	NYLON,UL94V-0,BLACK	1-641964-1
6 PHOSPHOR BRONZE, 3	NYLON,UL94V-0,WHITE	641964-2
PHOSPHOR BRONZE, PRE-TIN	NYLON,UL94V-0,WHITE	641964-1

THIS DRAWING IS A CONTROLLED DOCUMENT.

DIMENSIONS: mm [INCHES]

TOLERANCES UNLESS OTHERWISE SPECIFIED:
0 PLC ± -
1 PLC ± -
2 PLC ± 0.13 [.005]
3 PLC ± -
4 PLC ± -
ANGLES ± 0°30'

MATERIAL: SEE TABLE
FINISH: SEE TABLE

DWN K. WHITAKER 19JAN2005
CHK S. RIDGILL 19JAN2005
APVD S. RIDGILL 19JAN2005
PRODUCT SPEC —
APPLICATION SPEC —
WEIGHT —

TE Connectivity

NAME: PIN HEADER ASSEMBLY, POLARIZED,2 CIRCUIT, UNIVERSAL MATE-N-LOK ™

SIZE	CAGE CODE	DRAWING NO	RESTRICTED TO
A1	00779	C-641964	—

CUSTOMER DRAWING | SCALE 5:1 | SHEET 1 OF 1 | REV P2

4805 (3/11)