THIS DRAWING IS UNPUBLISHED. RELEASED FOR PUBLICATION .1998
© COPYRIGHT 1998 BY TYCO ELECTRONICS CORPORATION. ALL RIGHTS RESERVED.

LOC	DIST
–	–

REVISIONS

P	LTR	DESCRIPTION	DATE	DWN	APVD
	A2	Released as per ECR-07-030422	17.12.07	SP	TS
	A3	**REVISED PER ECO-09-027197**	**21JAN10**	**KK**	**HMR**

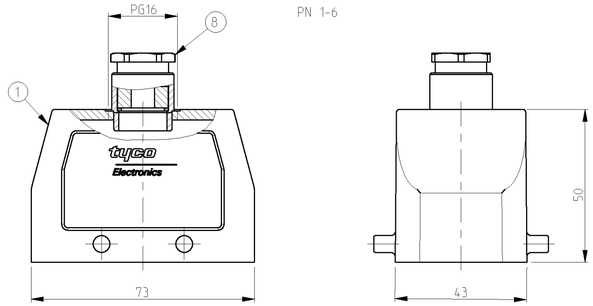

PN 1-6

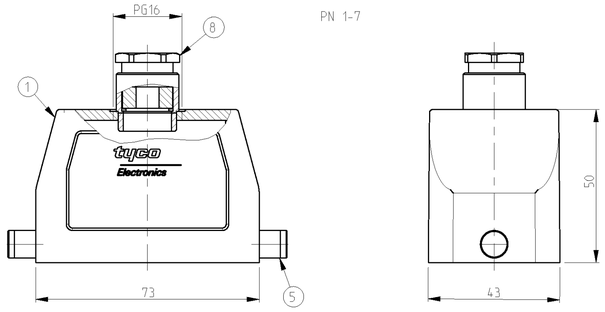

PN 1-7

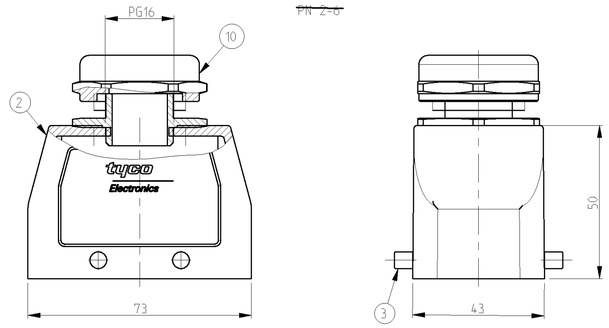

~~PN 2-6~~

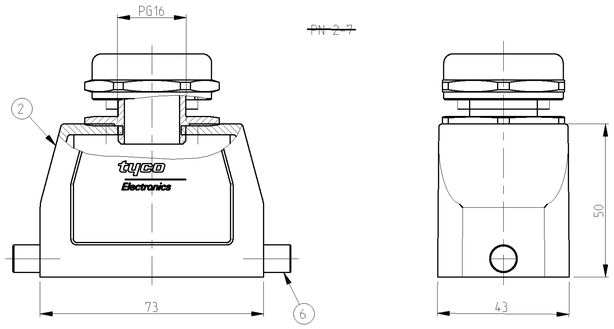

~~PN 2-7~~

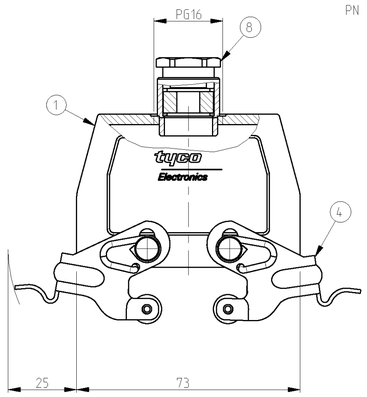

PN 1-1

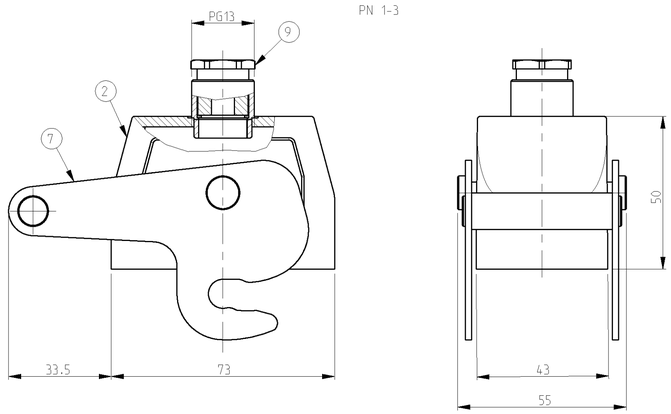

PN 1-3

NOTES.

1 Material:Housing:Aluminium Diecasting Alloy

2 Surface-Powder Varnish Grey
-Aluminium Oxide +
Varnish Black

3 Varnish on the inside not necessary

4 Packaging
Quantity 5 Pieces in a box

5 OBSOLETE PARTS: OBSOLETE CIS STREAMLINING PER D.RENAUD/D.SINISI

PN 1-7	~~PN 2-7~~	PN 1-3
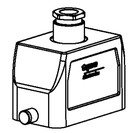		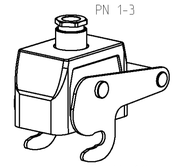
SCALE 1:2	SCALE 1:2	SCALE 1:2
PN 1-6	~~PN 2-6~~	PN 1-1
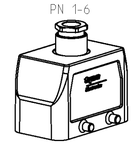	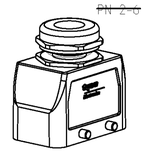	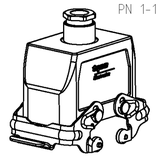
SCALE 1:2	SCALE 1:2	SCALE 1:2

	OBSOLETE 5			OBSOLETE 4							
	1			1		Gland fitting PG16	Brass	Nickel plated		10	
1						Cabel connection round PG13	Brass	Nickel plated		9	
		1	1		1	Cabel connection round PG16	Brass	Nickel plated		8	
1						ZB-Central clip	Steel	Zinc plated		7	
	2					LB-Clip bolt	Stainless steel	-		6	
		2				LB-Clip bolt	Steel	Zinc plated		5	
			2			VS-Side clip	Steel	Zinc plated		4	
				4		VS-Clip bolt	Stainless steel	-		3	
1	1			1		Hood HB.10.Pg1.16	Aluminium	Aluminium oxide	Black	2	
		1	1		1	Hood HB.10.Pg1.16	Aluminium	-	Grey	1	
1-3	~~2-7~~ 1-7		1-1	~~2-6~~ 1-6		DESCRIPTION	MATERIAL	SURFACE	COLOR	ITEM NO	NOTES
HB-Z.10.STO-ZB.1.13	HB-K.10.STO-GR.1.16	HB.10.STO-GR.1.16	HB.10.STO-VS.1.16	HB-K.10.STO.1.16	HB.10.STO.1.16	ORDERING TEXT					

THIS DRAWING IS A CONTROLLED DOCUMENT FOR TYCO ELECTRONICS CORPORATION IT IS SUBJECT TO CHANGE AND THE CONTROLLING ENGINEERING ORGANIZATION SHOULD BE CONTACTED FOR THE LATEST REVISION.

DIMENSIONS: mm

TOLERANCES UNLESS OTHERWISE SPECIFIED:
A.CSI 2768-mKE
A.DIN 5450-50
0 PLC ±
1 PLC ±
2 PLC ±
3 PLC ±
4 PLC ±
ANGLES ±

MATERIAL: -

FINISH: -

DWN Schneider 06.06.01
CHK Schweiger 06.06.01
APVD -
PRODUCT SPEC -
APPLICATION SPEC -
WEIGHT -

Tyco Electronics
Tyco Electronics,AMP,GmbH
D-53819,Neukirchen,Germany

NAME: Hood HB.10.STO.1.16

SIZE	CAGE CODE	DRAWING NO	RESTRICTED TO
A	00779	C-1102265	-

CUSTOMER DRAWING | SCALE 1:1 | SHEET 1 OF 1 | REV A3