PART NUMBER	ENGINEERING NUMBER	FINISH LENGTH
1300660129	CR3106A30M003	0.98' [0.3M]
1300660257	CR3106A30M005	1.64' [0.5M]
1300660130	CR3106A30M010	3.28' [1.0M]

PART NUMBER LEGEND

CR3106A30M005

LENGTH
M005 = 0.5 METER
M010 = 1 METER
M100 = 10 METER

CABLE LENGTH TOLERANCES
>.3M [1FT]: +19mm-0 [+.75in-0]
.3 - .9M [1 - 3FT]: +44.5mm-0 [+1.75in-0]
.9 - 1.8M [3 - 6FT]: +55.6mm-0 [+2.19in-0]
1.8 - 3.7M [6 - 12FT: +88.9mm-0 [+3.50in-0]
3.7 - 7.3M [12 - 24FT]: +165.1mm-0 [+6.50in-0]
7.3-14.6M [24 - 48FT]: +317.5mm-0 [+12.50in-0]
14.6 - 30.5M [48-100FT]: +622.3mm-0 [+24.50in-0]
OVER 30M [100FT] +2% OF FINISHED LENGTH

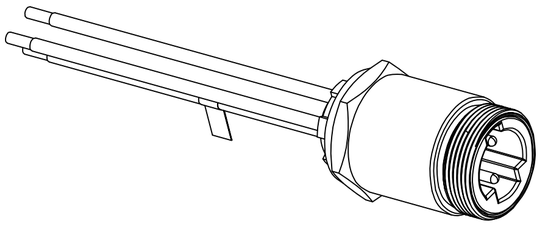

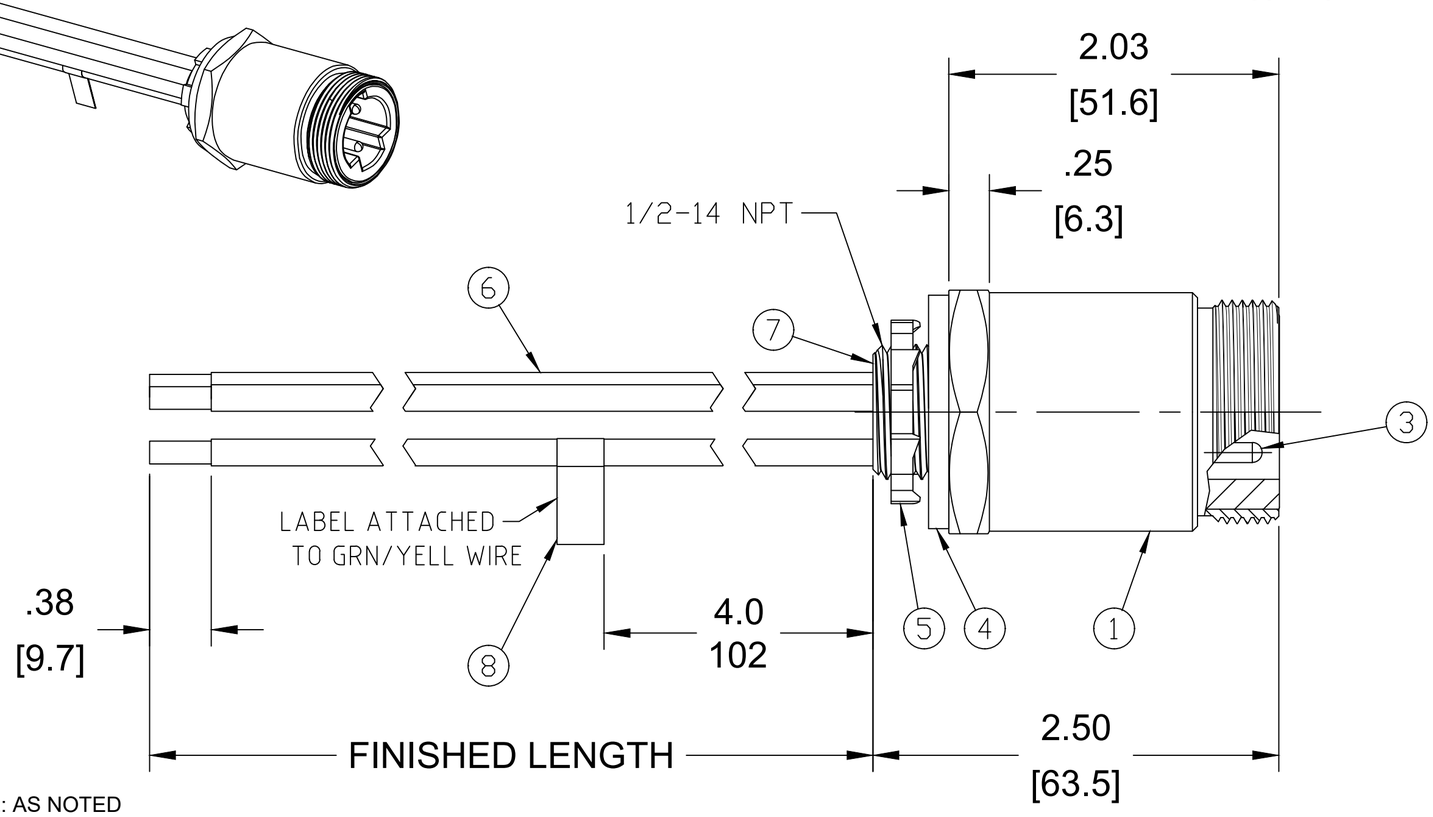

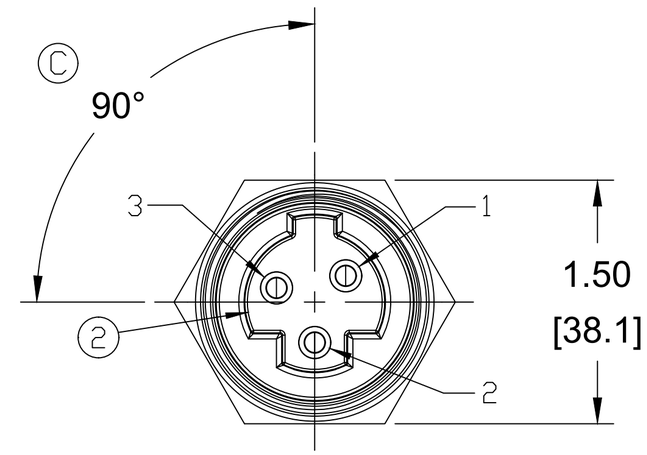

MALE FACE VIEW

NOTES:
1. MATERIAL: AS NOTED
2. FINISH: AS NOTED
3. ELECTRICAL:
   VOLTAGE: 630V PER IEC 60664
   600V PER UL 2237
   CURRENT: 32A
4. TEMP RATING: -20°C TO +90°C
5. PROTECTION: IP67 (WHEN MATED)
6. COUPLING THREAD: 1 3/8-16UN
7. UL UL LISTED FILE: E258922
8. ALL DIMS ARE FOR REFERENCE UNLESS TOLERANCED OR NOTED OTHERWISE

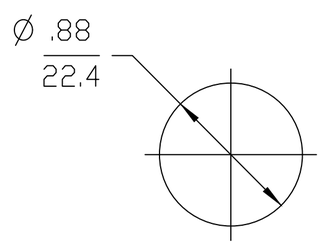

TYPICAL KNOCKOUT

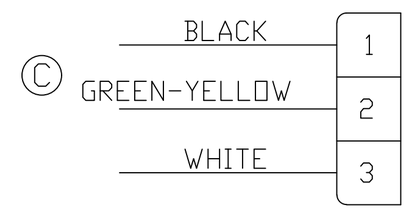

WIRING DIAGRAM

ITEM	DESCRIPTION	MATERIAL	FINISH
8	FLAG LABEL	VINYL	YELLOW
7	POTTING	EPOXY	BLACK
6	#10-1 AWG UL1015 WIRE	PVC JACKET	SEE WIRING DIAGRAM
5	LOCKNUT	STEEL	ZINC PLATED
4	GASKET	NEOPRENE	BLACK
3	CONTACT PIN	COPPER ALLOY	GOLD PLATED
2	MALE INSERT, 3 POLE	TPE C	BLACK
1	RECEPTACLE SHELL	ALUMINUM	BLACK ANODIZED

DOCUMENT STATUS	P1	RELEASE DATE	2020/02/16 21:03:35

SYMBOLS: EA = 0; EC = 0; EF = 0; S = 0; ▼ = 0; C = 0; ☒ = 0; ■ = 0; ▽ = 0

THIS DRAWING CONTAINS INFORMATION THAT IS PROPRIETARY TO MOLEX ELECTRONIC TECHNOLOGIES, LLC AND SHOULD NOT BE USED WITHOUT WRITTEN PERMISSION

DIMENSION UNITS: INCH/MM
SCALE: 1:1

GENERAL TOLERANCES (UNLESS SPECIFIED)

	mm	INCH
4 PLACES	±----	±----
3 PLACES	±----	±----
2 PLACES	±----	±----
1 PLACE	±----	±----
0 PLACES	±----	±----
ANGULAR TOL ±	---- °	

DRAFT WHERE APPLICABLE MUST REMAIN WITHIN DIMENSIONS

CURRENT REV DESC: INSERT WAS PVC, GRN/YELL WIRE WAS GREEN, ADD 90 DEG KEY ANGLE

EC NO: 630235
DRWN: RSTONE 2020/02/03
CHK'D: MZIELINSKI 2020/02/12
APPR: BWOODMAN 2020/02/16
INITIAL REVISION:
DRWN: CLYORK 2010/01/19
APPR: DTITUS 2010/01/20

THIRD ANGLE PROJECTION | DRAWING: C-SIZE | SERIES: 130066

molex

BRAD POWER RECEPTACLE
3 POLE, MALE 1/2 NPT, ALT KEY, 10AWG

PRODUCT CUSTOMER DRAWING

DOCUMENT NUMBER	DOC TYPE	DOC PART	REVISION
SD-130066-060	PSD	001	C

MATERIAL NUMBER	CUSTOMER	SHEET NUMBER
SEE P/N CHART	GENERAL MARKET	1 OF 1

FORMAT: IN-ACAD-tb-prod-C
REVISION: A1
DATE: 2019/06/12