THIS DRAWING IS UNPUBLISHED. RELEASED FOR PUBLICATION -,- .
© COPYRIGHT - By - ALL RIGHTS RESERVED.

LOC	DIST
G	01

REVISIONS

P	LTR	DESCRIPTION	DATE	DWN	APVD
	D1	REDRAWN PER ECO-14-019282	31DEC2014	NK	DR

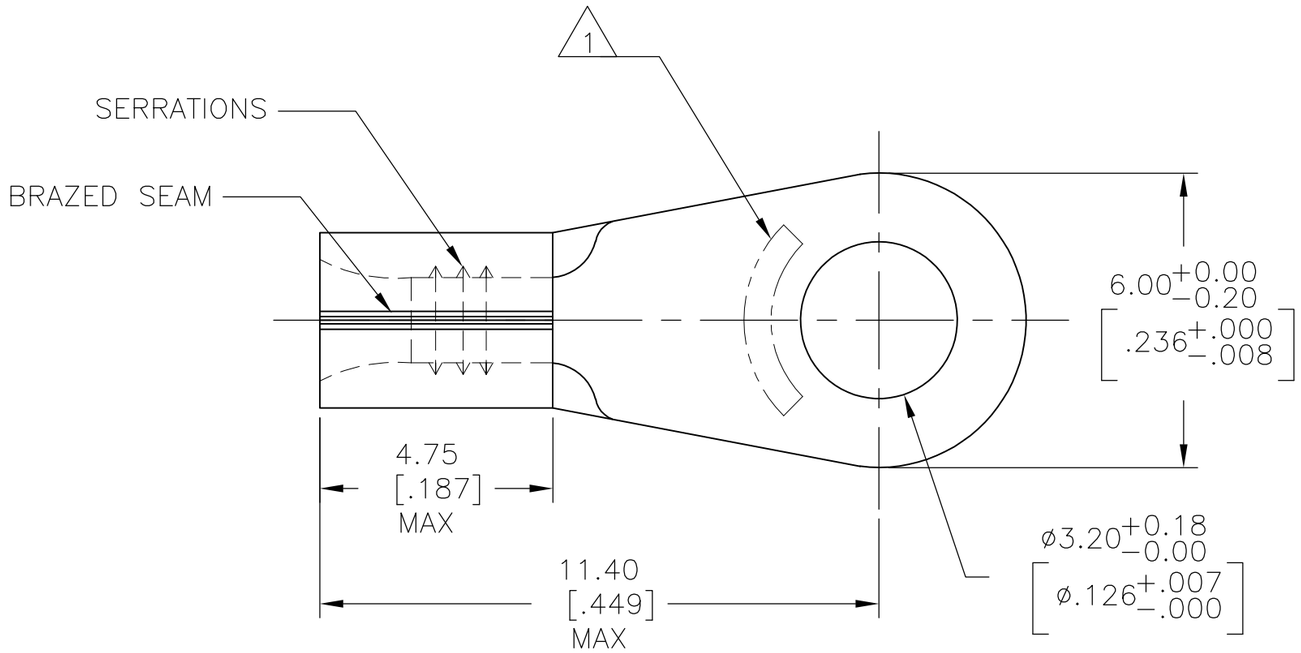

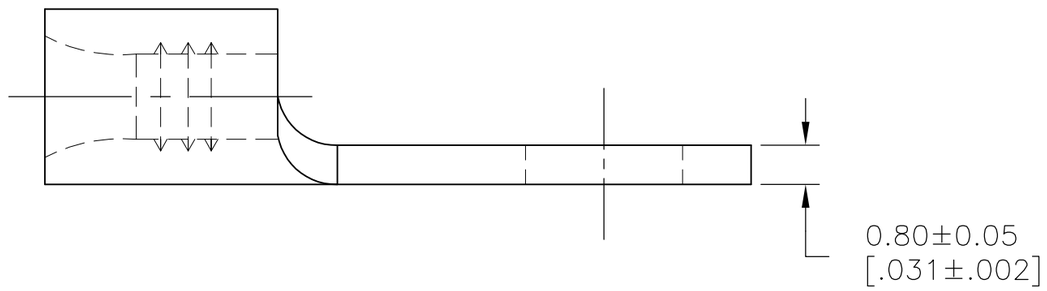

1. STAMP "AMP 3-1" APPROX AS SHOWN.
2. MATERIAL: COPPER PER ASTM B152, ANNEALED
3. FINISH: 0.0030[.000120] MIN EXT. THK. PER ASTM B545.

QTY	PACKAGE TYPE	PART NUMBER
1000	LOOSE PIECE	165291

THIS DRAWING IS A CONTROLLED DOCUMENT.

DIMENSIONS: mm [INCHES]

TOLERANCES UNLESS OTHERWISE SPECIFIED:
0 PLC ± -
1 PLC ± -
2 PLC ± -
3 PLC ± -
4 PLC ± -
ANGLES ± -

MATERIAL 2

FINISH 3

TYPE -DIN- SOLISTRAND

WIRE RANGE 0.5-1.0 mm2 (987-1974 CMA)

DWN NAGALAKSHMI K 24DEC2014
CHK ROHDE DANIEL F 24DEC2014
APVD ROHDE DANIEL F 24DEC2014
PRODUCT SPEC —
APPLICATION SPEC —
WEIGHT —

TE Connectivity

NAME RING TONGUE STUD M3

SIZE	CAGE CODE	DRAWING NO	RESTRICTED TO
A3	00779	C-165291	—

CUSTOMER DRAWING

SCALE	SHEET	REV
8:1	1 OF 1	D1