ROHS COMPLIANT

PRODUCT DATA DRAWING

REVISION HISTORY			
REV	DESCRIPTION	DATE	APPROVED
-	NRN 34841	07/08	STW

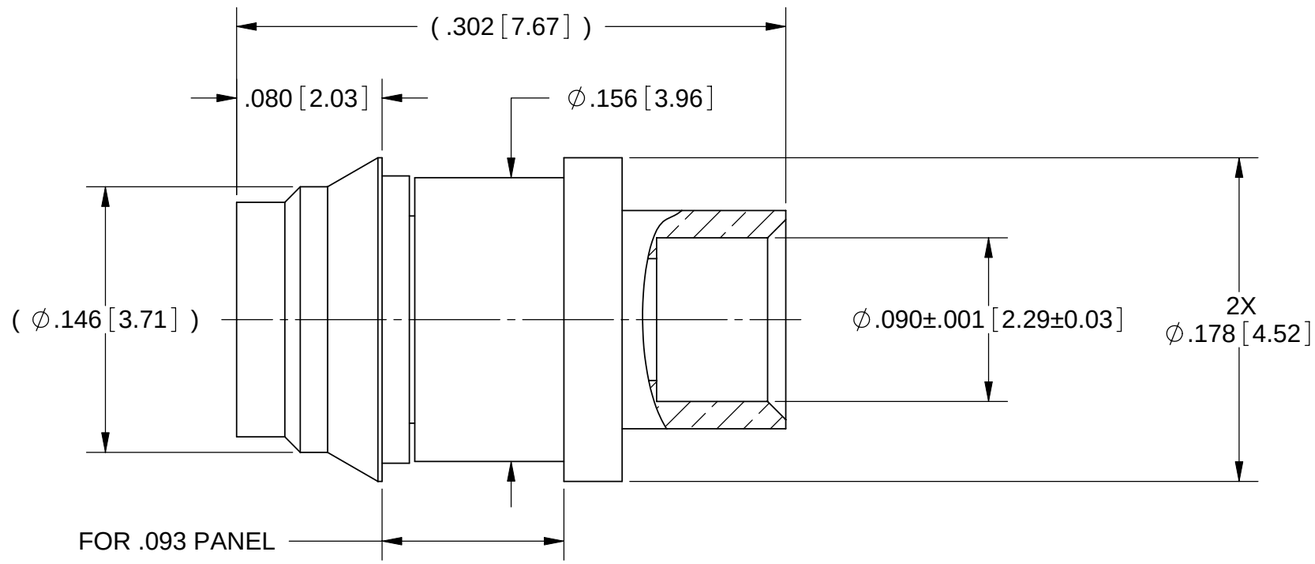

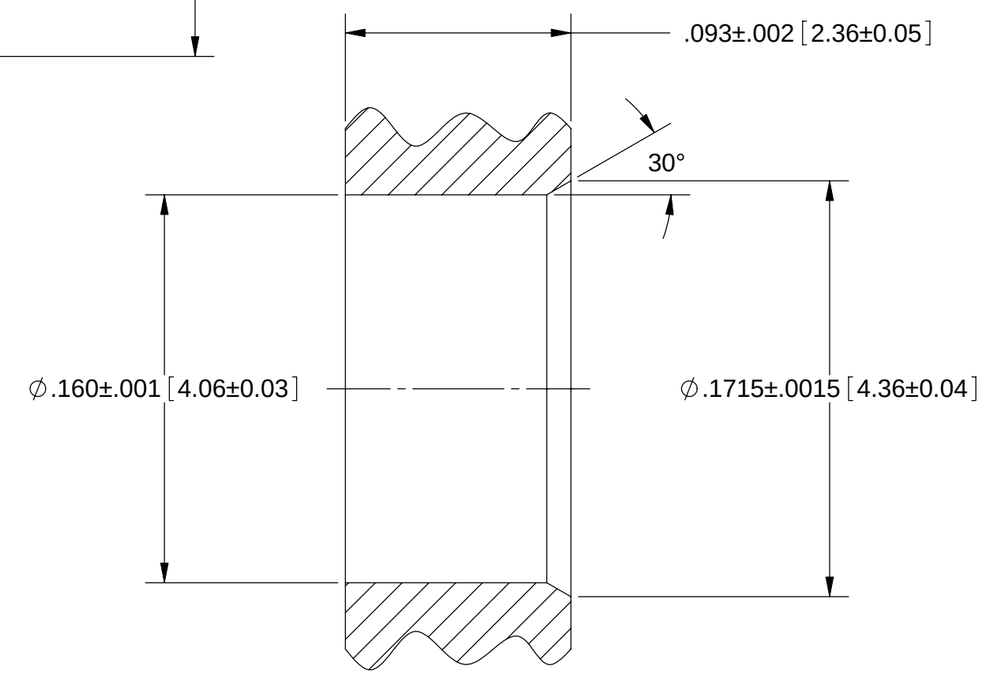

RECOMMENDED PANEL HOLE

MATERIAL:

BODY:	STAINLESS STEEL PER AMS-5640, UNS 30300 (TYPE 1)
SLEEVE, CONTACT & RETAINING RING:	BERYLLIUM COPPER PER ASTM B196, ALLOY No. UNS C17300, TD04
INSULATOR:	PTFE PER ASTM D1710, TYPE I, GRADE 1, CLASS B

FINISH:

BODY:	PASSIVATED PER AMS-QQ-P-35, TYPE II
SLEEVE, CONTACT & RETAINING RING:	GOLD PER ASTM B 488, TYPE II, CODE C, CLASS 1.27; OVER NICKEL PER AMS-QQ-N-290, CLASS 1, .00005" MIN.

PERFORMANCE:

IMPEDANCE:	50 OHMS
FREQ. RANGE:	DC TO 40 GHz
VSWR:	1.25:1 DC TO 26.5 GHz 1.35:1 26.5 TO 40.0 GHz
DWV:	325 VRMS
OPERATING TEMP.:	-55°C TO +125°C

REMOVAL TOOL P/N 500-32-028

MATERIAL:	SEE NOTES
FINISH:	SEE NOTES
SURFACE AREA:	N/A

PROPRIETARY

THE INFORMATION CONTAINED IN THIS DRAWING IS THE SOLE PROPERTY OF SV MICROWAVE, INC. ANY REPRODUCTION IN PART OR AS A WHOLE WITHOUT THE WRITTEN PERMISSION OF SV MICROWAVE, INC IS PROHIBITED.

DIMENSIONS ARE IN INCHES TOLERANCES:

FRACTIONAL: ±1/64 ANGULAR: X° ±1°0' X°X' ±15'

DECIMAL: .X ±.030
.XX ±.010
.XXX ±.005

INTERPRET DIMENSIONS AND TOLERANCES PER ASME Y14.5M - 1994

THIRD ANGLE PROJECTION

UNLESS OTHERWISE SPECIFIED

1) ALL DIMENSIONS ARE IN INCHES [MILLIMETERS]
2) ALL DIMENSIONS ARE AFTER PLATING.
3) BREAK CORNERS & EDGES .005 R. MAX.
4) CHAM. 1ST & LAST THREADS.
5) SURFACE ROUGHNESS 63₂ MIL-STD-10.
6) DIA.'S ON COMMON CENTERS TO BE CONCENTRIC WITHIN .005 T.I.R.
7) REMOVE ALL BURRS

DRAWN:	DAL 08/06/08
CHECKED:	STW 08/06/08
APPROVED:	STW 08/06/08

SV Microwave, Inc.
2400 Centrepark West Drive, Suite 100
West Palm Beach, FL 33409

TITLE: SMPM MALE SB SNAP-IN FOR .093 PANEL FOR ∅.086 S.R. CABLE

SIZE	CAGE CODE	DWG. NO.
B	95077	3211-40005

SCALE: 16:1 SHEET 1 OF 1