Appendix A: Spacer Pads

Pad designation and bottom view dimensions	Height	For use with the following:	Dim. H Max.
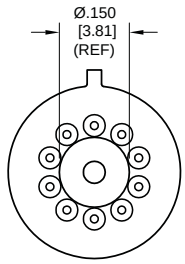	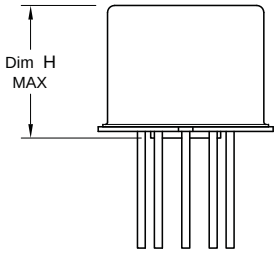	ER411T ER412, ER412D, ER412DD	.295 (7.49)
		712, 712D, 712TN, RF300, RF310, RF320	.300 (7.62)
		ER420, ER422D, ER420DD, 421, ER421D, ER421DD, ER422, ER422D, ER422DD, 722, 722D, RF341	.305 (7.75)
		ER431T, ER432T, ER432, ER432D, ER432DD	.400 (10.16)
		732, 732D, 732TN, RF303, RF313, RF323	.410 (10.41)
"M4" Pad for TO-5		RF312	.350 (8.89)
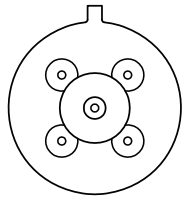	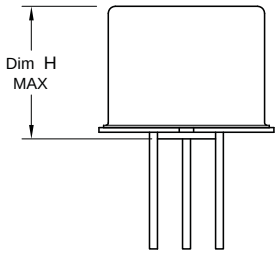	ER411, ER411D, ER411DD	.295 (7.49)
		ER431, ER431D, ER431DD	.400 (10.16)
		RF311	.300 (7.62)
"M4" Pad for TO-5		RF331	.410 (10.41)
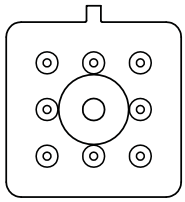	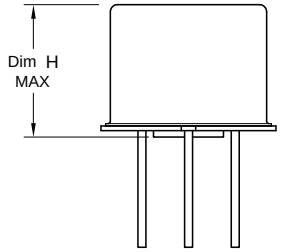	172, 172D	.305 (7.75)
		ER114, ER114D, ER114DD, J114, J114D, J114DD	.300 (7.62)
		ER134, ER134D, ER134DD, J134, J134D, J134DD	.400 (10.16)
		RF100	.315 (8.00)
"M4" Pad for Centigrid®		RF103	.420 (10.67)
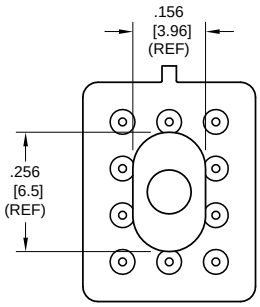	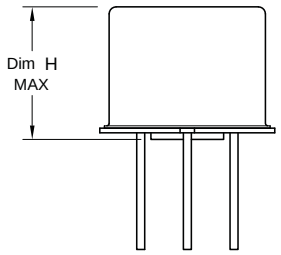	122C, A152	.320 (8.13)
		ER116C, J116C	.300 (7.62)
		ER136C, J136C	.400 (10.16)
		RF180	.325 (8.25)
"M9" Pad for Centigrid®		A150	.305 (7.75)

Notes:
1. Spacer pad material: Polyester film.
2. To specify an "M4" or "M9" spacer pad, refer to the mounting variants portion of the part numbering example in the applicable datasheet.
3. Dimensions are in inches (mm).
4. Unless otherwise specified, tolerance is ± .010 (.25).
5. Add 10 mΩ to the contact resistance show in the datasheet.
6. Add 0.01 oz. (0.25 g) to the weight of the relay assembly shown in the datasheet.

© 2008 Teledyne Relays

Appendix A: Spreader Pads

Pad designation and bottom view dimensions	Height	For use with the following:	Dim. H Max.
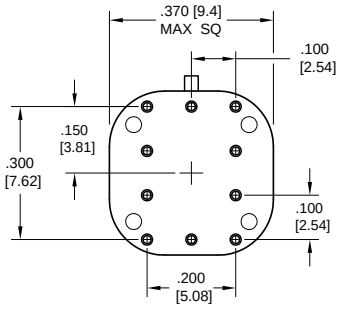 “M” Pad 5/ 6/	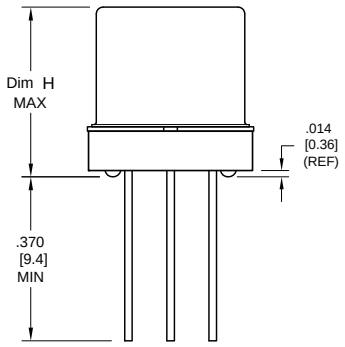	ER411T, J411T, ER412, ER412D ER412DD, J412, J412D, J412DD ER412T, J412T	.388 (9.86)
		712, 712D, 712TN	.393 (9.99)
		ER431T, J431T, ER432, ER432D ER432DD, J432, J432D, J432DD ER432T, J432T	.493 (12.52)
		732, 732D, 732TN	.503 (12.78)
		ER420, J420, ER420D, J420D ER420DD, J420DD, ER421, J421 ER421D, J421D, ER421DD J422D, ER422DD, J422DD, 722	.398 (10.11)
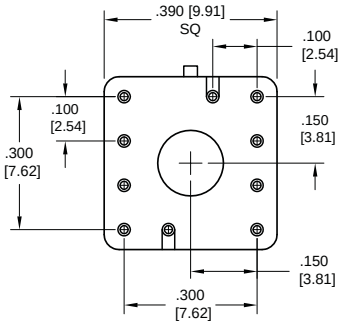 “M2” Pad 7/ 8/	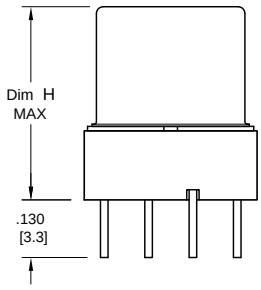	ER411T ER412, ER412D, ER412DD J412, J412D, J412DD	.441 (11.20)
		712, 712D	.451 (11.46)
		ER421, ER421D, ER421DD 722, 732D	.451 (11.46)
		ER431T ER432, ER432D, ER432DD	.546 (13.87)
		732, 732D	.556 (14.12)
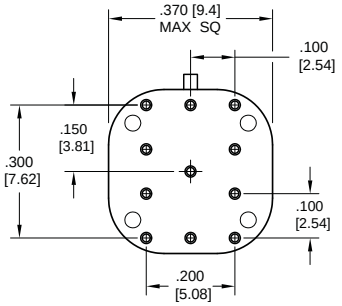 “M3” Pad 5/ 6/ 9/	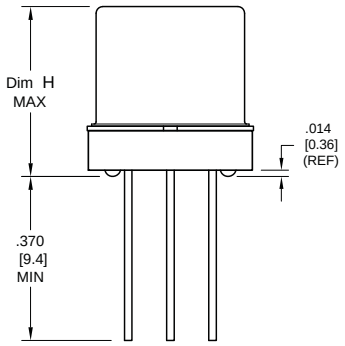	ER411, ER411D, ER411DD ER411TX ER412X, ER412DX, ER412DDX ER412TX	.388 (9.86)
		712X, 712DX, 712TNX	.393 (9.99)
		ER420X, ER420DX, ER420DDX ER421X, ER421DX, ER421DDX ER422X, ER422DX ER422DDX, 722X, 722DDX	.398 (10.11)
		ER431, ER431D, ER431DD ER431TX ER432X, ER432DX, ER432DDX ER432TX	.493 (12.52)
		732X, 732DX, 732TNX	.503 (12.78)

Notes:

1. Spreader pad material: Diallyl Phthalate.
2. To specify an “M”, “M2” or “M3” spreader pad, refer to the mounting variants portion of the part number example in the applicable datasheet.
3. Dimensions are in inches (mm).
4. Unless otherwise specified, tolerance is ± .010” (0.25).

5/. Add 25 mΩ to the contact resistance shown in the datasheet.
6/. Add .01 oz. (0.25 g) to the weight of the relay assembly shown in the datasheet.
7/. Add 50 mΩ to the contact resistance shown in the datasheet.
8/. Add 0.025 oz (0.71 g) to the weight of the relay assembly shown in the datasheet.
9/. M3 pad to be used only when the relay has a center pin (e.g. ER411M3-12A, 722XM3-26.)

© 2008 Teledyne Relays

Appendix A: Ground Pin Positions

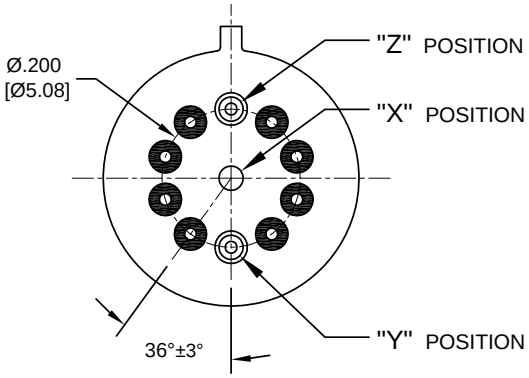

TO-5 Relays:
ER411T, ER412, ER412T, ER420, ER421, ER422, ER431T, ER432, ER432T, 712, 712TN, 400H, 400K, 400V, RF300, RF303, RF341, RF312, RF310, RF313, RF320, RF323

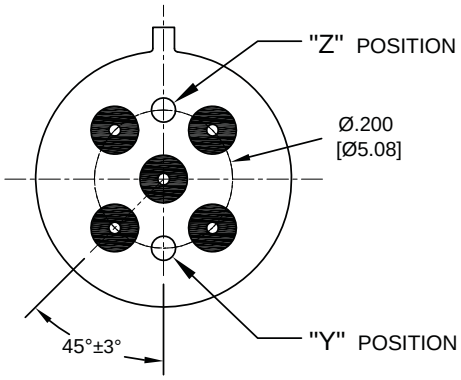

TO-5 Relays:
ER411, ER431, RF311, RF331

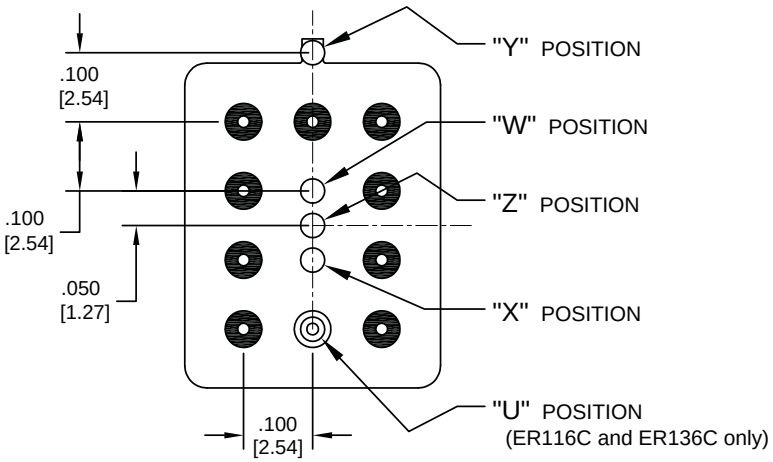

Centigrid® Relays:
RF180, ER116C, 122C, ER136C

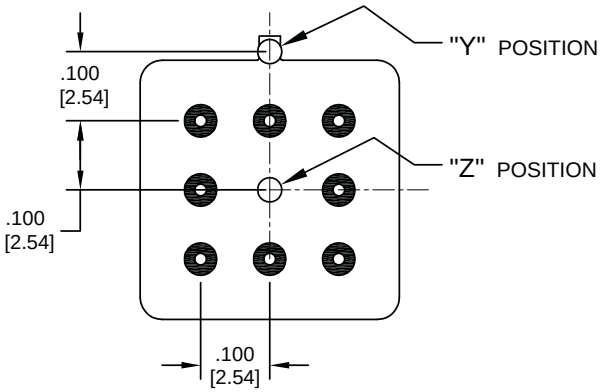

Centigrid® Relays:
RF100, RF103, ER114, ER134, 172

○ Indicates ground pin position

● Indicates glass insulated lead position

◎ Indicates ground pin or lead position depending on relay type

NOTES
1. Terminal views shown
2. Dimensions are in inches (mm)
3. Tolerances: ± .010 (±.25) unless otherwise specified
4. Ground pin positions are within .015 (0.38) dia. of true position
5. Ground pin head dia., 0.035 (0.89) ref: height 0.010 (0.25) ref.
6. Lead dia. 0.017 (0.43) nom.

© 2008 Teledyne Relays