THIS DRAWING IS UNPUBLISHED. RELEASED FOR PUBLICATION -,- .
© COPYRIGHT - By - ALL RIGHTS RESERVED.

LOC	DIST
H	—

REVISIONS

P	LTR	DESCRIPTION	DATE	DWN	APVD
	Y	REVISED PER ECO-15-005333	07JUL2015	AP	RP

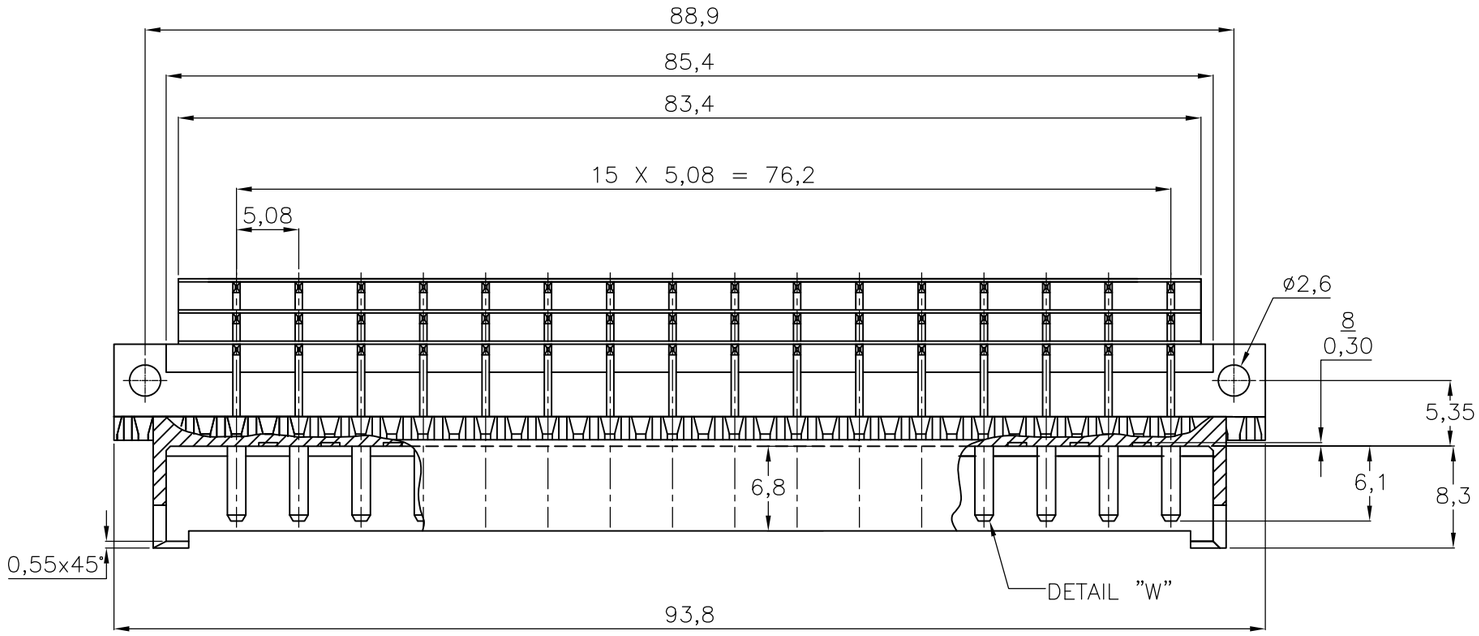

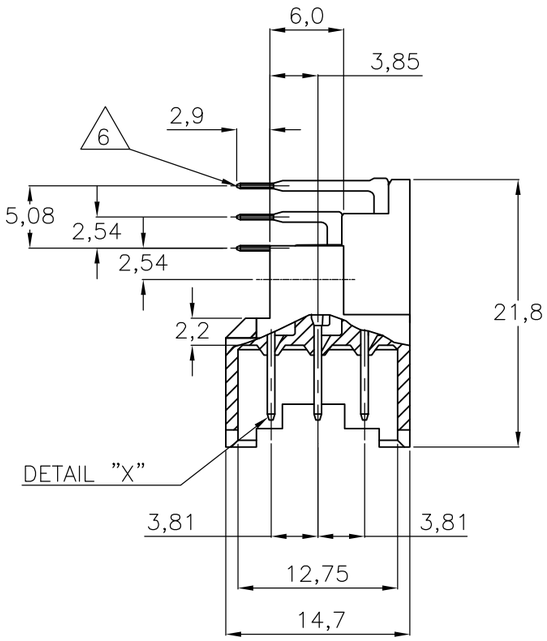

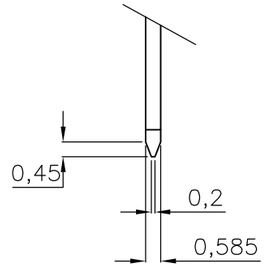

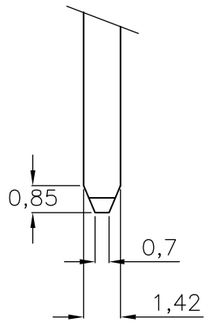

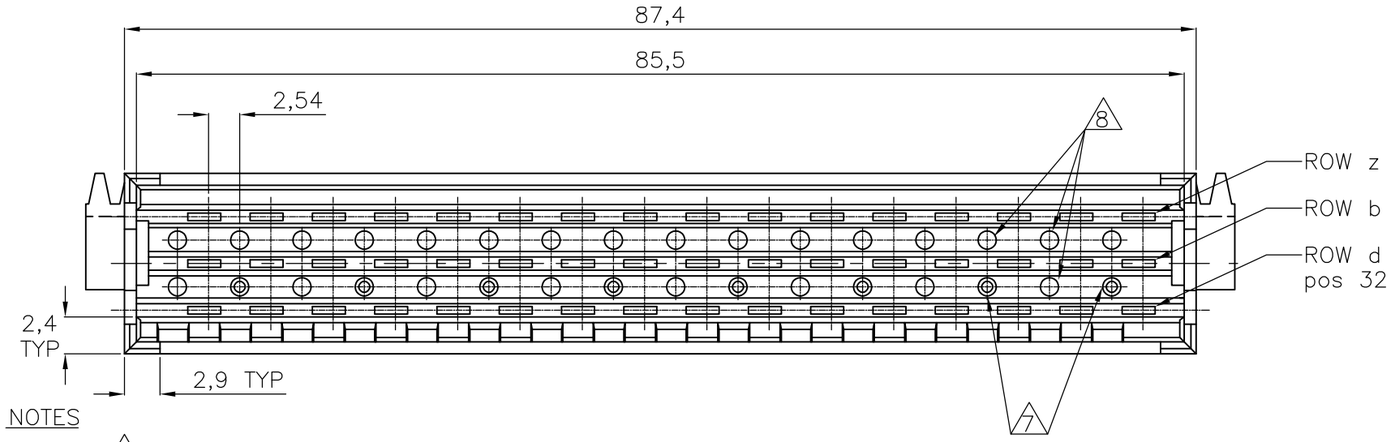

POS. NO		2	4	6	8	10	12	14	16	18	20	22	24	26	28	30	32
F 48 ROW	z	X	X	X	X	X	X	X	X	X	X	X	X	X	X	X	X
	b	X	X	X	X	X	X	X	X	X	X	X	X	X	X	X	X
	d	X	X	X	X	X	X	X	X	X	X	X	X	X	X	X	X

AN ASTERISK ,,X" DENOTES A STANDARD CONTACT.

NOTES

1. MATERIAL:
   - HOUSING: THERMOPLASTIC POLYESTER, COLOR GREY.
   - CONTACTS: BRASS.
2. PLATING CONTACT: EIC 60603-2 PERFORMANCE LEVEL I OVER NICKEL IN CONTACT AREA. TIN OVER 1.25µm Ni ON SOLDER POST.
3. PLATING CONTACT: EIC 60603-2 PERFORMANCE LEVEL II OVER NICKEL IN CONTACT AREA. TIN OVER 1.25µm Ni ON SOLDER POST.
4. PLATING CONTACT: 2,0 µm Au OVER 1,25 µm Ni IN CONTACT AREA. Sn over 1,25 µm Ni ON SOLDER POST.
5. PLATING CONTACT: EIC 60603-2 PERFORMANCE LEVEL III OVER NICKEL IN CONTACT AREA. TIN OVER 1.25µm Ni ON SOLDER POST.
6. SOLDER POSTS SUITABLE FOR P.C.B. HOLES 0,8+/-0,05 OR 1,0+/-0,1 DIA.
7. 8 HOLES SUITABLE FOR KEYING PIN PN. 215916-1.
8. KEYING HOLES TO BE DRILLED BY CUSTOMER.

	FINISH	MATERIAL	PART NUMBER
	SEE NOTE 5	SEE NOTE 1	2-164045-8
2--7 OBSOLETE	SEE NOTE 4		~~2-164045-7~~
	SEE NOTE 3		2-164045-4
	SEE NOTE 2		2-164045-1

THIS DRAWING IS A CONTROLLED DOCUMENT.

DIMENSIONS: mm

TOLERANCES UNLESS OTHERWISE SPECIFIED:
0 PLC ± -
1 PLC ± -
2 PLC ± -
3 PLC ± -
4 PLC ± -
ANGLES ± -

MATERIAL -

FINISH -

DWN R.v.LOKVEN 27AUG91
CHK J.GIBBELS -
APVD — -
PRODUCT SPEC —
APPLICATION SPEC —
WEIGHT —

TE Connectivity

NAME
48 POS. DIN 41612 F MALE
90 DEG. SOLDER CONNECTOR

SIZE	CAGE CODE	DRAWING NO	RESTRICTED TO
A3	00779	C-164045	—

CUSTOMER DRAWING | SCALE NTS | SHEET 1 OF 2 | REV Y

THIS DRAWING IS UNPUBLISHED. RELEASED FOR PUBLICATION – , – .
© COPYRIGHT – By – ALL RIGHTS RESERVED.

LOC	DIST
H	—

REVISIONS

P	LTR	DESCRIPTION	DATE	DWN	APVD
	–	SEE SHEET 1	–	—	—

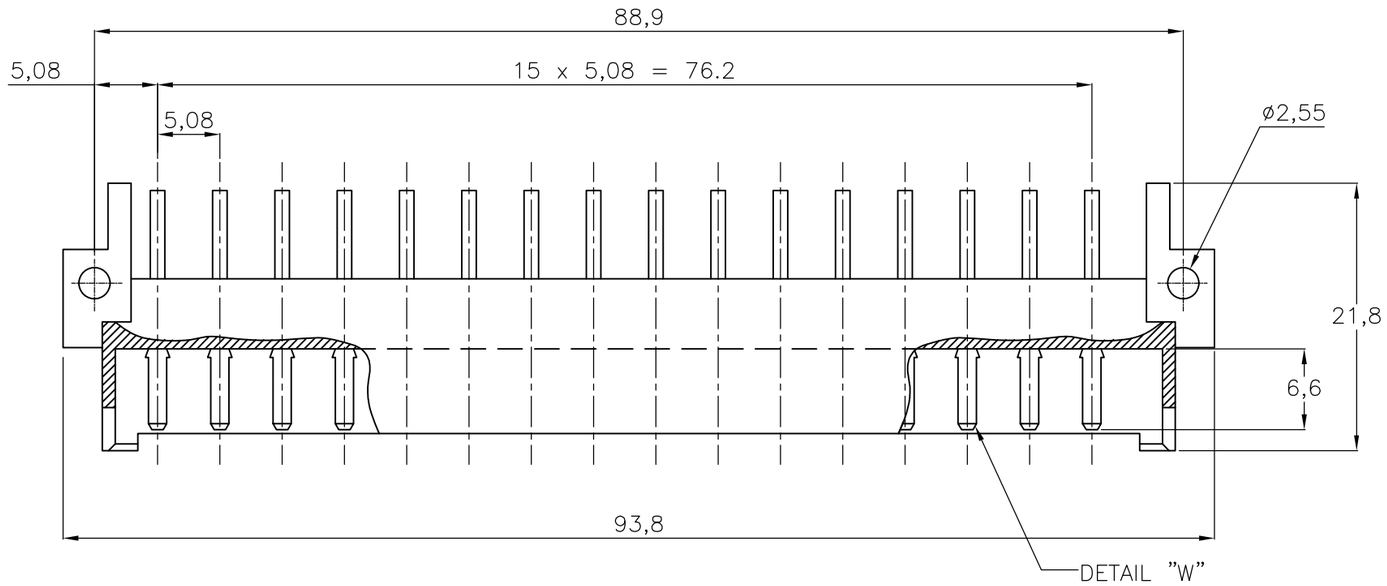

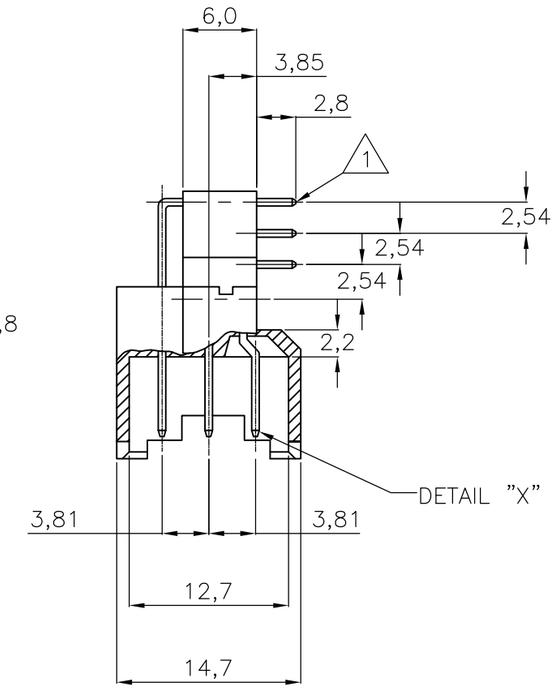

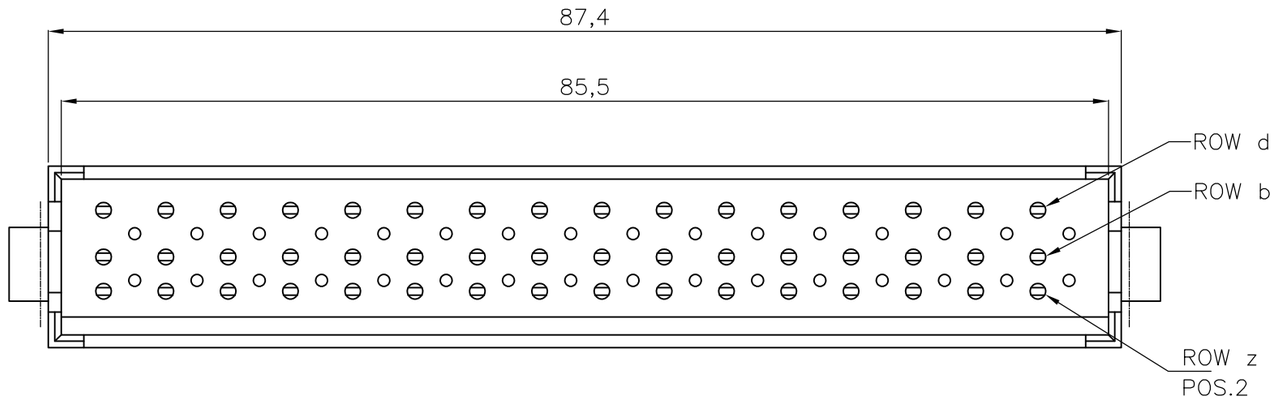

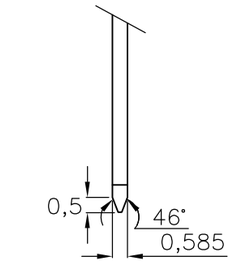

DETAIL "X"

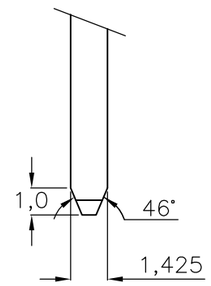

DETAIL "W"

9 PLATING CONTACT: 1,25 µm Au OVER 1,25 µm Ni IN CONTACT AREA. Sn over 1,25 µm Ni ON SOLDER POST.

10 PLATING CONTACT: 0,8 µm Au OVER 1,25 µm Ni IN CONTACT AREA. Sn over 1,25 µm Ni ON SOLDER POST.

SUPERSEDED BY 2-164045-4	SEE NOTE 10	SEE NOTE 1	9-164045-4
SUPERSEDED BY 2-164045-1	SEE NOTE 9		9-164045-1
	FINISH	MATERIAL	PART NUMBER

POS. NO		2	4	6	8	10	12	14	16	18	20	22	24	26	28	30	32
F 48 ROW	z	X	X	X	X	X	X	X	X	X	X	X	X	X	X	X	X
	b	X	X	X	X	X	X	X	X	X	X	X	X	X	X	X	X
	d	X	X	X	X	X	X	X	X	X	X	X	X	X	X	X	X

AN ASTERISK ,,X" DENOTES A STANDARD CONTACT.

THIS DRAWING IS A CONTROLLED DOCUMENT.

DIMENSIONS: mm

TOLERANCES UNLESS OTHERWISE SPECIFIED:
0 PLC ± –
1 PLC ± –
2 PLC ± –
3 PLC ± –
4 PLC ± –
ANGLES ± –

MATERIAL –

FINISH –

DWN J.GIBBELS 04AUG97
CHK J.GIBBELS –
APVD – –
PRODUCT SPEC —
APPLICATION SPEC —
WEIGHT —

TE Connectivity

NAME 48 POS. DIN 41612 F MALE 90 DEG. SOLDER CONNECTOR

SIZE	CAGE CODE	DRAWING NO	RESTRICTED TO
A3	00779	C-164045	—

CUSTOMER DRAWING | SCALE NTS | SHEET 2 OF 2 | REV Y