CASE FINISH	CURRENT (AMPS)	WORKING VOLTAGE				MAXIMUM DC RESISTANCE (OHMS)	MAXIMUM VOLTAGE DROP		MINIMUM CAPACITANCE (uF)	MIN. INSERTION LOSS PER MIL-STD-220, FULL LOAD, +25°C												
		-55°C TO +85°C		-55°C TO +125°C																		
		AC	DC	AC	DC		DC	AC		14 KHz	30 KHz	50 KHz	75 KHz	100 KHz	150 KHz	300 KHz	500 KHz	1 MHz	10 MHz	100 MHz	1 GHz	10 GHz
GOLD	15	---	80	---	50	0.005	0.075	---	1.4	--	15	--	--	--	28	34	--	44	60	70	70	--

PART MARKING:

9050F-000-0000 (01)
SCI DATE CODE

PACKAGE MARKING:

BUBBLE PACK:
9050-000-0000
SCI DATE CODE
LOT NO.
QTY.

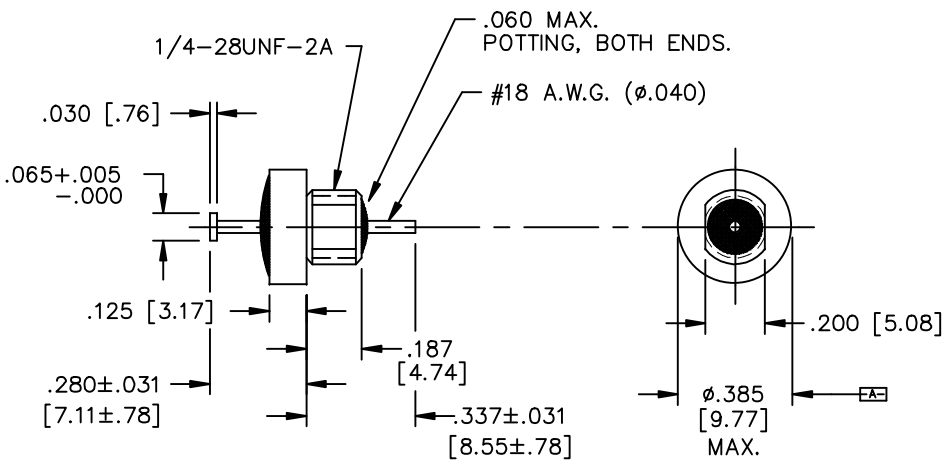

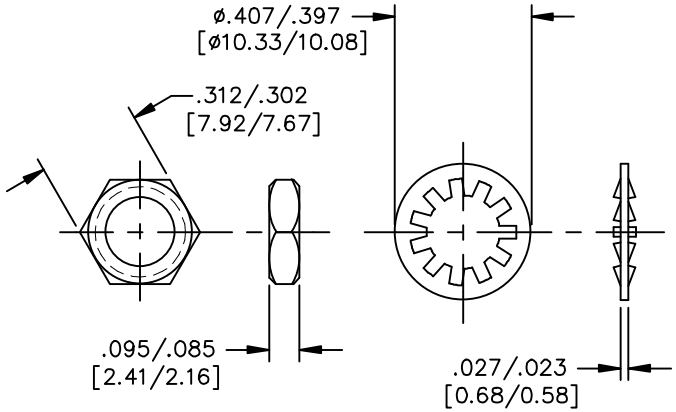

MTG. HARDWARE

MARKING NOTES:

N/A

SCHEMATIC

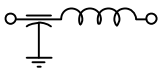

NOTES:

1) MOUNTING TORQUE NOT TO EXCEED 7in-lbs.
2) THIS IS A LEAD FREE PRODUCT.
3) MAX. REFLOW IS 245°C FOR 5 SEC.

REV. NO.	CHANGE NOTICE
01	CN 26308-CPD
00	CN 21016-CPD

UNLESS OTHERWISE SPECIFIED DIMENSIONS ARE IN INCHES [MM]. DO NOT SCALE.

THIRD ANGLE PROJECTION

TOLERANCES UNLESS OTHERWISE SPECIFIED
Fractions ±
Dec. .xx±
Dec. .xxx± .010
Angles ±0° 30'

CODE IDENT. NO. OLSP2

SPECTRUM CONTROL INC.

FAIRVIEW PENNSYLVANIA

Dwn. KAUFFMAN
Date 8-3-05
Engr. T. KERN
Sheet 1 of 1

Description Low Pass EMI Filter

9050F-000-0000

Quality Products From The Specialists In Electro-Magnetic Compatibility