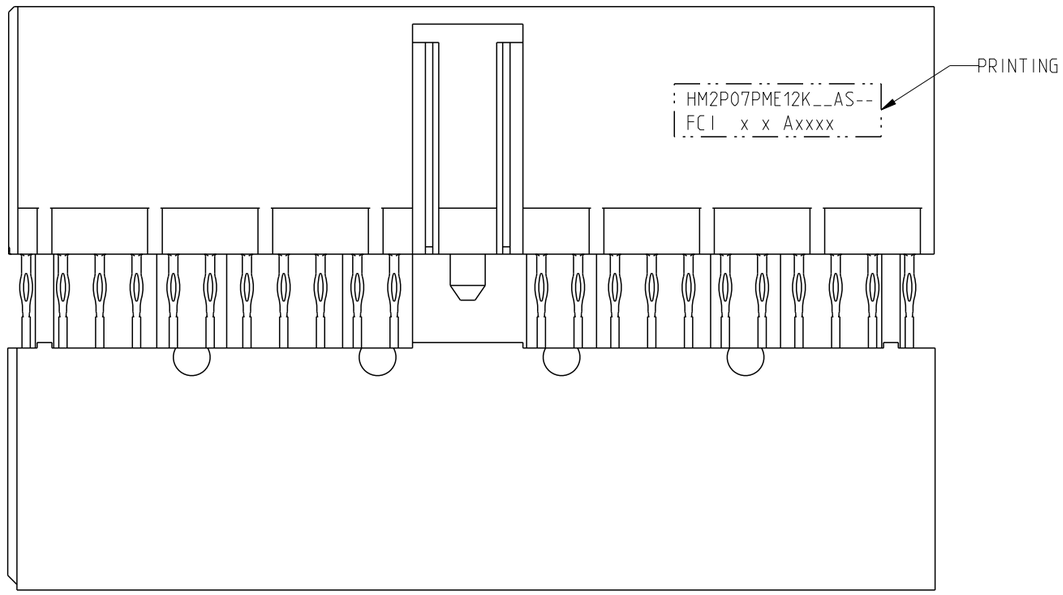

SCALE 3/1

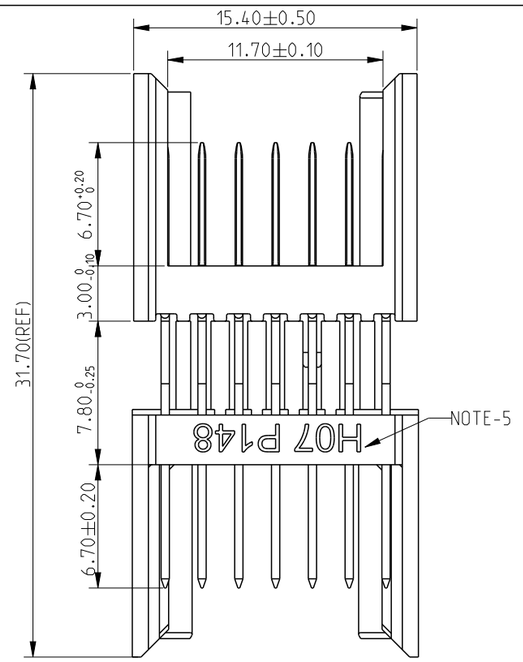

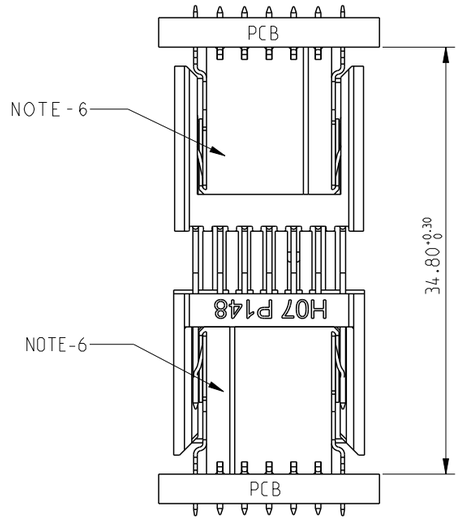

SCALE 2/1

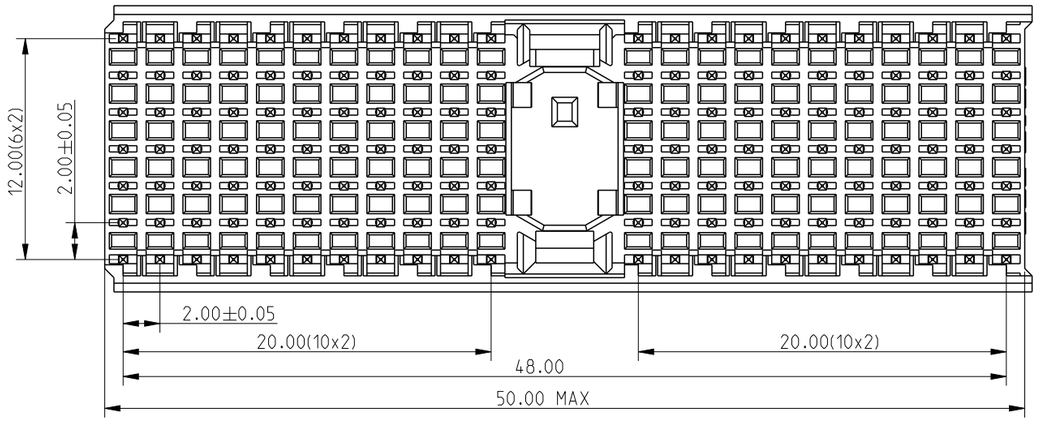

PACKAGING BOX
(50 CONNECTORS IN EACH BOX)
(NOTE-2)

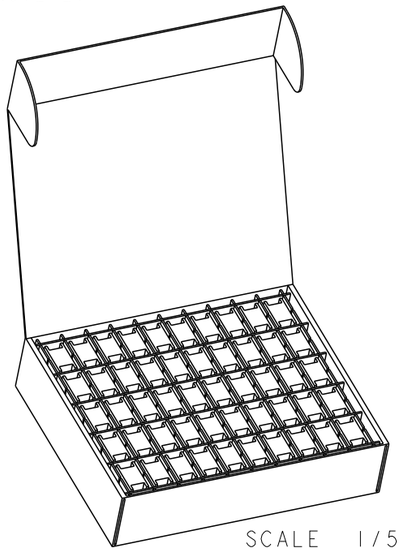

SCALE 1/5

PERFORMANCE CHARACTERISTICS

CURRENT RATING	: 1.5 A AT 20°C (FULLY LOADED)
	: 1 A AT 70°C (FULLY LOADED)
RATED VOLTAGE	: 500 V AC (CONT / CONT)
OPERATING TEMP	: -55°C TO 125°C
CONTACT RESISTANCE	: 20 mΩ MAX
INSERTION FORCE	: 0.75 N MAX / CONT
EXTRACTION FORCE	: 0.15 N MIN / CONT
INSULATION RESISTANCE	: 10E+04 M ΩMIN

NOTES :-

1. NON LEAD FREE PART NO. = HM2P07PME12K__ASSY
   PLATING CODES
   LEAD FREE PART NO. = HM2P07PME12K__ASLF
   PLATING CODES
2. PACKED IN HONEYCOMB BOX-50 NOS EACH
3. MATERIAL
   HOUSING :- FLAME RETARDED POLYESTER
   CONTACTS:- PHOSPHER BRONZE
4. FINISH
   CONTACTS:- GOLD SELECTIVE PLATING
5. CATALOG No. OF SHROUD IS EMBOSSED
6. MATING STRAIGHT RECEPTACLE HM2S01PE5101----

PLATING CODE TABLE

Plating Code	Performance Level
GL	1 (500 Mating Cycles)
GF	2 (250 Mating Cycles
GC	3 (50 Mating Cycles)

LOADING PATTERN MATING SIDE

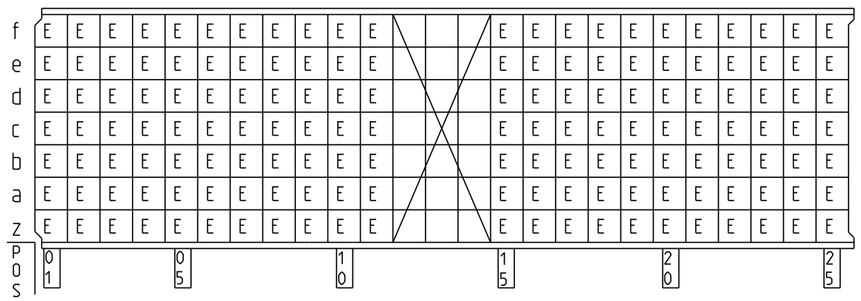

CONTACT OVERVIEW

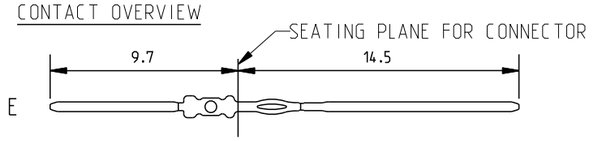

rev	ecn no	dr	date
A	104-0088	AB	2004-09-23
B	105-0001	AB	2005-01-03
C	106-0107	AB	2006-07-17
D	107-0094	AB	2007-07-31
E	110-0143	AB	2010-06-30
-	-	-	-
-	-	-	-

www.fciconnect.com

surface - ✓ | tolerance std | projection | mm

TOLERANCES UNLESS OTHERWISE SPECIFIED

Dr	Alex Babu	2004-07-28	ANGULAR	LINEAR	0.X	±0.2	size A3 / Scale 1/1
Eng	Alex Babu	2004-07-28			0.XX	±0.1	
Chr	Biju K Paul	2004-07-28	0° ±1°		0.XXX	±0.05	ECN 104-0088
Appr	Biju K Paul	2004-07-28	Product family		MILLIPACS		Spec ref

title: MPACS TYPE-A RPU-SHROUD ASSY
-

dwg no: BSC203204000 | Rev. E

catalog no: HM2P07PME12K--AS-- | CUSTOMER COPY | sheet 1 of 1

Copyright FCI.

REV F - 2006-04-17