molex
one company › a world of innovation

This document was generated on 10/25/2012

PLEASE CHECK WWW.MOLEX.COM FOR LATEST PART INFORMATION

Part Number: 67800-7045

Status: Active

Overview: Serial ATA Products

Description: 1.27mm Pitch Serial ATA High Speed Header, Vertical, Through Hole, with Locking Latch, 7 Circuits, 0.38µm Gold (Au) Plating, for 1.60mm PCB, White, Footprint B, with PCB Locator Tabs, Lead-Free

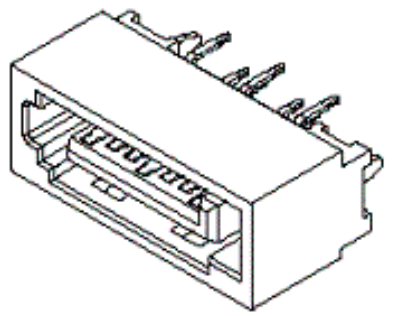

Series

image - Reference only

Documents:

3D Model
Drawing (PDF)
Product Specification PS-67491-001 (PDF)
RoHS Certificate of Compliance (PDF)

Agency Certification

CSA	LR19980
UL	E29179

General

Product Family	PCB Headers
Series	67800
Application	Board-to-Board, Signal, Wire-to-Board
Comments	Staggered Solder Pin|Footprint B
Overview	Serial ATA Products
Product Name	Serial ATA
UPC	822350875325

Physical

Breakaway	No
Circuits (Loaded)	7
Circuits (maximum)	7
Color - Resin	Natural
Durability (mating cycles max)	50
First Mate / Last Break	Yes
Flammability	94V-0
Glow-Wire Compliant	No
Guide to Mating Part	No
Keying to Mating Part	Yes
Lock to Mating Part	Yes
Material - Metal	Brass
Material - Plating Mating	Gold
Material - Plating Termination	Tin
Net Weight	0.835/g
Number of Rows	1
Orientation	Vertical
PC Tail Length	2.45mm
PCB Locator	Yes
PCB Retention	Yes
PCB Thickness - Recommended	1.60mm
Packaging Type	Tray
Pitch - Mating Interface	1.27mm
Pitch - Termination Interface	1.27mm
Polarized to Mating Part	Yes
Shrouded	Fully
Stackable	No
Surface Mount Compatible (SMC)	No
Temperature Range - Operating	-35°C to +85°C
Termination Interface: Style	Through Hole

EU RoHS
ELV and RoHS Compliant

China RoHS

REACH SVHC
Not Reviewed

Low-Halogen Status
Not Reviewed

Need more information on product environmental compliance?

Email productcompliance@molex.com
For a multiple part number RoHS Certificate of Compliance, click here

Please visit the Contact Us section for any non-product compliance questions.

Search Parts in this Series
67800Series

Electrical

Current - Maximum per Contact	1.5A
Voltage - Maximum	15V DC

Material Info

Reference - Drawing Numbers

Electrical Model Document	EE-67800-001
Product Specification	PS-67491-001
Sales Drawing	SD-67800-007

This document was generated on 10/25/2012

PLEASE CHECK WWW.MOLEX.COM FOR LATEST PART INFORMATION