THIS DRAWING IS UNPUBLISHED. RELEASED FOR PUBLICATION -,- .
© COPYRIGHT - By - ALL RIGHTS RESERVED.

LOC	DIST
CM	00

REVISIONS

P	LTR	DESCRIPTION	DATE	DWN	APVD
	B2	REVISED PER ECR 13-014759	24SEP2013	KB	RP
	B3	REVISED PER ECR-14-004108	19MAR2014	AV	RP
	B4	REVISED PER ECR-14-014878	19NOV2014	AV	ZD

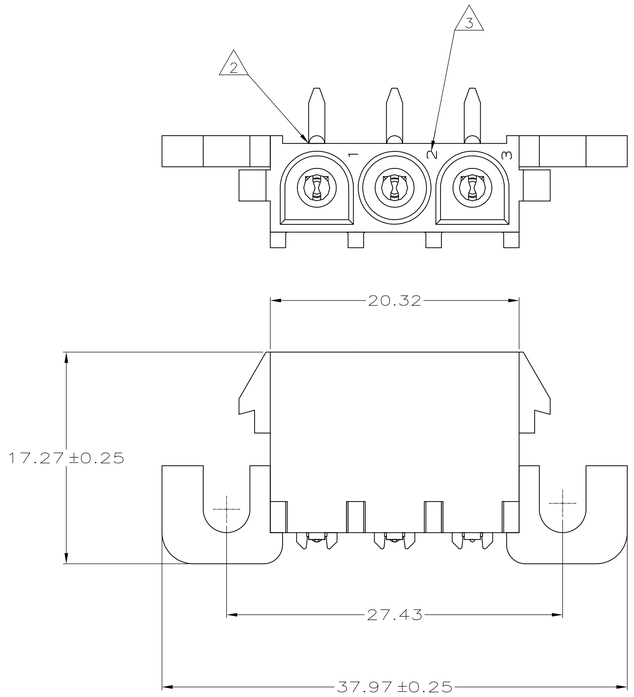

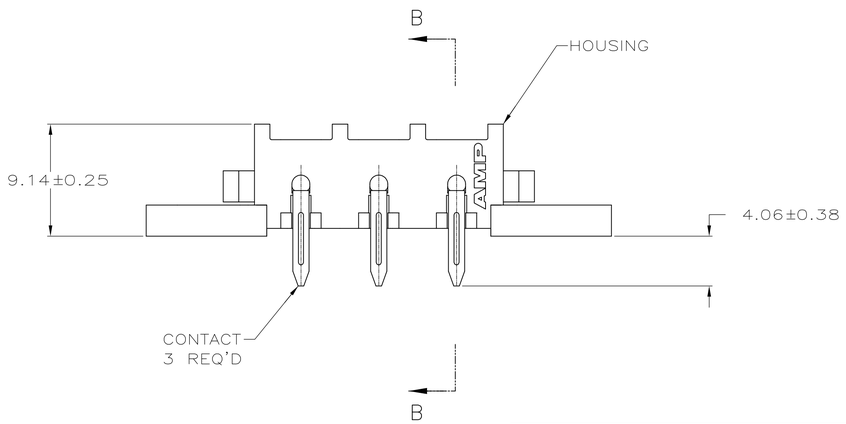

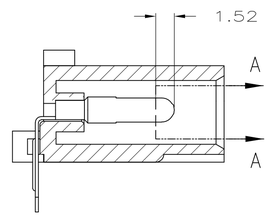

SECTION B–B

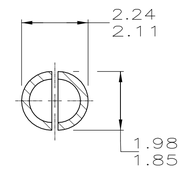

SECTION A–A
SCALE 10:1

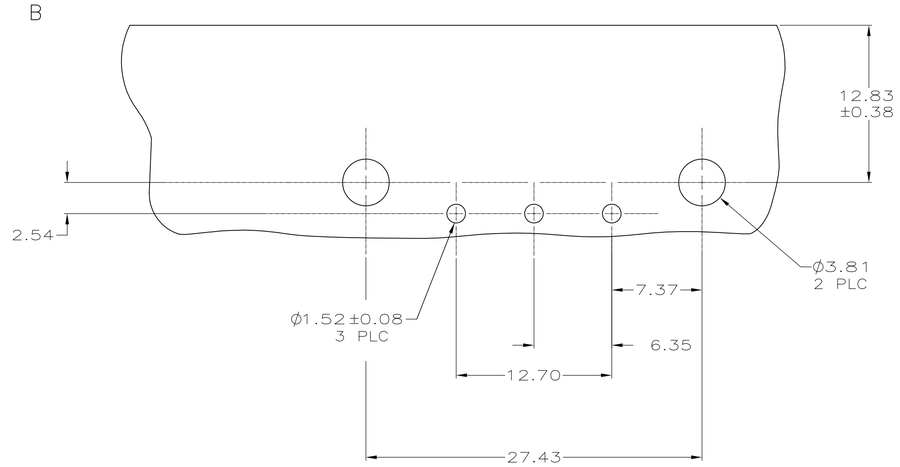

RECOMMENDED MOUNTING HOLE PATTERN
FOR 1.57 THICK P.C. BOARD

1 PARTS COMPLY WITH TE SOLDERABILITY SPECIFICATION 109-11-5.

2 OPTIONAL CONSTRUCTION MAY DELETE THIS RIB.

3 CIRCUIT IDENTIFICATION CHARACTERS ARE ADJACENT TO THE INDICATED CAVITIES,BUT LOCATION AND ORIENTATION MAY DIFFER FROM PRINT.

4 FLAMMABILITY V2 FOR THICKNESS 0.38mm, 1.5mm, qnd 3.0mm PER IEC 60695-11-10.

5 GLOW-WIRE FLAMMABILITY (GWFI) 800°C FOR THICKNESS 0.38mm AND 0.75mm PER IEC 60695-2-12.

6 GLOW-WIRE FLAMMABILITY (GWFI) 960°C FOR THICKNESS 1.5mm AND 3.0mm PER IEC 60695-2-12.

7 GLOW-WIRE IGNITION (GWIT) 825°C FOR THICKNESS 0.38mm, 0.75mm, 1.5mm AND 3.0mm PER IEC 60695-2-13.

8 MATERIAL CORRESPONDING TO THE REQUIREMENT OF IEC 60335. (INL GLOW WIRE TEST 750°C WITHOUT FLAME)

2.29	.090	37.97	1.495
2.24	.088	27.43	1.080
2.11	.083	20.32	.800
1.98	.078	17.27	.680
1.85	.073	12.83	.505
1.57	.062	12.70	.500
1.52	.060	9.14	.360
0.38	.015	7.37	.290
0.25	.010	6.35	.250
0.13	.005	4.57	.180
0.08	.003	4.06	.160
.00127	.000050	3.81	.150
.00076	.000030	2.54	.100
MM	IN	MM	IN

CONVERSION TABLE

CONTACT	HOUSING	PART NUMBER
PH BRZ PRE-TIN	NYLON 66 UL 94V-0	8 1586892-3
PH BRZ PRE-TIN	NYLON UL 94V-2	1586892-1

THIS DRAWING IS A CONTROLLED DOCUMENT.

DIMENSIONS: mm

TOLERANCES UNLESS OTHERWISE SPECIFIED:
0 PLC ± –
1 PLC ± –
2 PLC ± 0.13
3 PLC ± –
4 PLC ± –
ANGLES ± –

MATERIAL: SEE TABLE
FINISH: SEE TABLE

DWN K. WHITAKER 09AUG2007
CHK D. COLEY 09AUG2007
APVD D. COLEY 09AUG2007
PRODUCT SPEC 108-1053
APPLICATION SPEC 114-1010
WEIGHT –

TE Connectivity

NAME: PIN HEADER ASSEMBLY, RIGHT ANGLE MOUNT,3 POSITION, UNIVERSAL MATE-N-LOK(TM)

SIZE A1 | CAGE CODE 00779 | DRAWING NO C-1586892 | RESTRICTED TO –

CUSTOMER DRAWING | SCALE 4:1 | SHEET 1 OF 1 | REV B4

METRIC

4805 (3/11)