SIGN	DATE	DESCRIPTION	APPROVER
1	2010.03.16	Add the 2p mark	Jacke
2	2010.09.01	The design is changed	Jacke
THIS IS CAD DRAWING, DO NOT REVISE MANUALLY!!!			

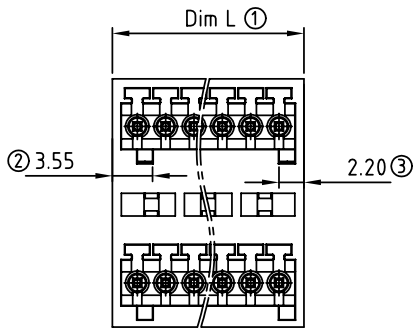

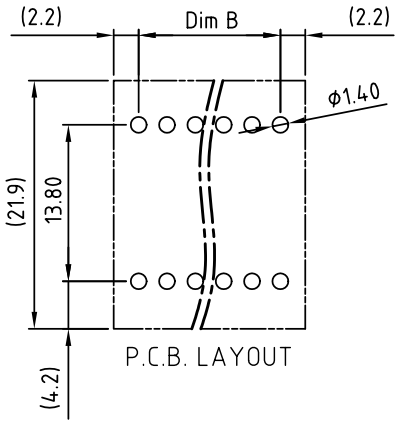

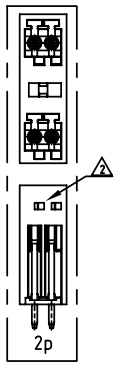

Material

- Item a Contact pin : Copper Whit Tin plated
- Item b Terminal (housing): Thermoplastic (UL94V-0)

Electrica

- Voltage rating:125V
- Current rating: 4A
- Withstanding Voltage: 1.25KV
- Operating temperature: -40°C to +115°C
- Soldering temperature: 250°C±10°C/5 Sec
- Safeyt Approval: c UL us

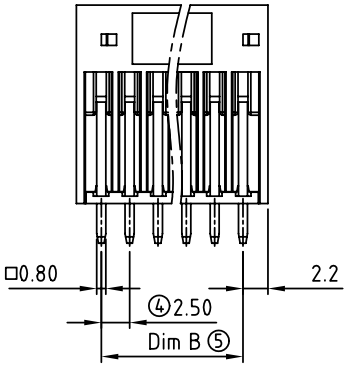

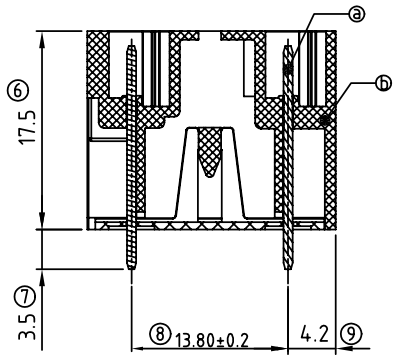

VLxxB1x0xxxx G

Poles
04 2×02 Contacts
06 2×03 Contacts
: :
48 2×24 Contacts

COLOR
0 Black (RAL9005)
2 Red (RAL3001/D)
3 Orange(RAL2011/P)
4 Yellow(RAL1018/A)
5 Green(RAL6018/T)
6 Blue (RAL5015/A)
8 Grey(RAL7035/D)

0000: "@" Mark
000A: "ANYTEK" Mark
Any special item by customer requst. please contact sales department.

Pb < 40,000ppm (RoHS)

Poles	2×2p	2×3p	2×4p	2×5p	2×6p	2×7p	2×8p	2×9p	2×10p	2×11p	2×12p	2×13p
Dim L	6.90	9.40	11.90	14.40	16.90	19.40	21.90	24.40	26.90	29.40	31.90	34.40
Dim B	2.50	5.00	7.50	10.00	12.50	15.00	17.50	20.00	22.50	25.00	27.50	30.00
TOL	±0.10				±0.15					±0.20		
Poles	2×14p	2×15p	2×16p	2×17p	2×18p	2×19p	2×20p	2×21p	2×22p	2×23p	2×24p	
Dim L	36.90	39.40	41.90	44.40	46.90	49.40	51.90	54.40	56.90	59.40	61.90	
Dim B	32.50	35.00	37.50	40.00	42.50	45.00	47.50	50.00	52.50	55.00	57.5	
TOL	±0.20		±0.25					±0.30				

ANYTEK

CUSTOMER COPY

ALL RIGHTS RESERVED. REPRODUCTION OR ISSUE TO THIRD PARTIES IN ANY FORM WHATEVER IS NOT PERMITTED WITHOUT WRITTEN AUTHORITY FROM THE PROPRIETOR. PROPERTY OF ANYTEK TECHNOLOGY CO., LTD

TITLE	VL 2.5 Series (2×2p~2×24p) 180°				
PART NO.	VLxxB1x0xxxxG		DWG NO.	8VL0602	
APPROVED	CHECKED	DESIGNED	DRAWN	CUST NO.	Tolerance
		Jacke 2010.09.01	Jacke 2009.6.26	UNIT: mm	X. ±0.5
				SCALE: NONE	X.X ±0.3
				SHEET: 01/01	X.XX ±0.1
				REV.: D	X° ±1°