THIS DRAWING IS UNPUBLISHED. RELEASED FOR PUBLICATION , .
© COPYRIGHT By – ALL RIGHTS RESERVED.

REVISIONS

P	LTR	DESCRIPTION	DATE	DWN	APVD
	G	REVISED ECR-14-010014	11NOV2014	I.T	W.H
	G1	REVISED PER ECO-17-010005	10OCT2017	R.L	S.Y

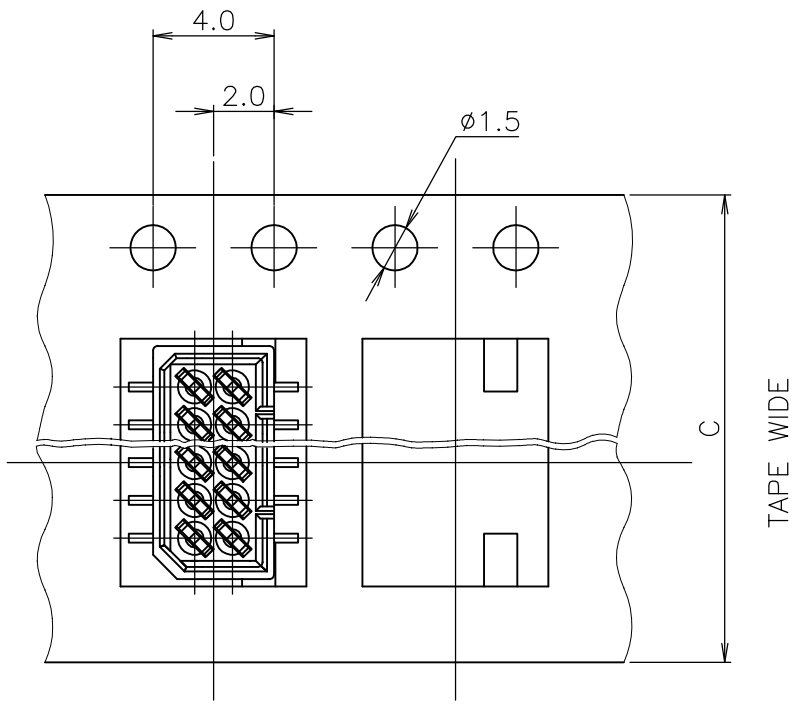

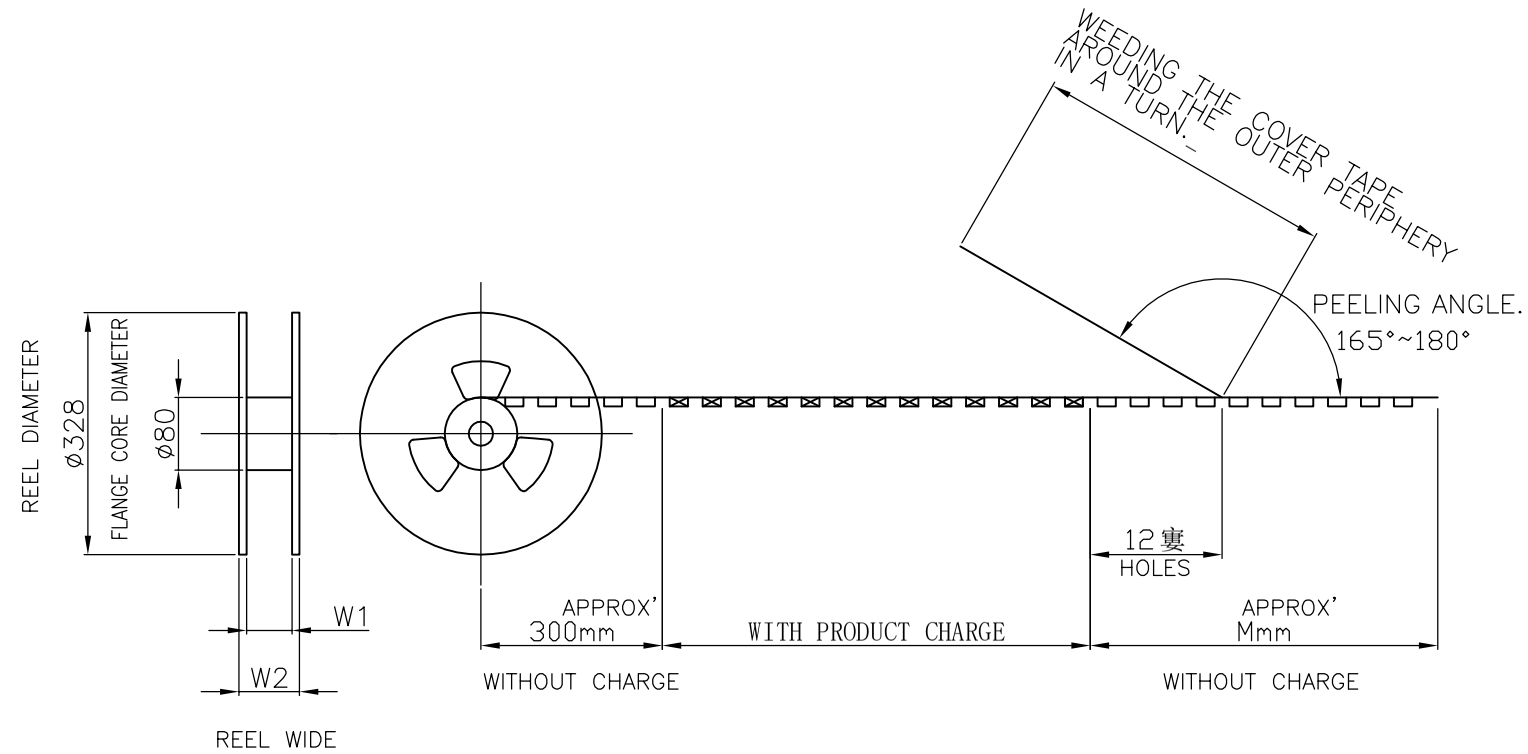

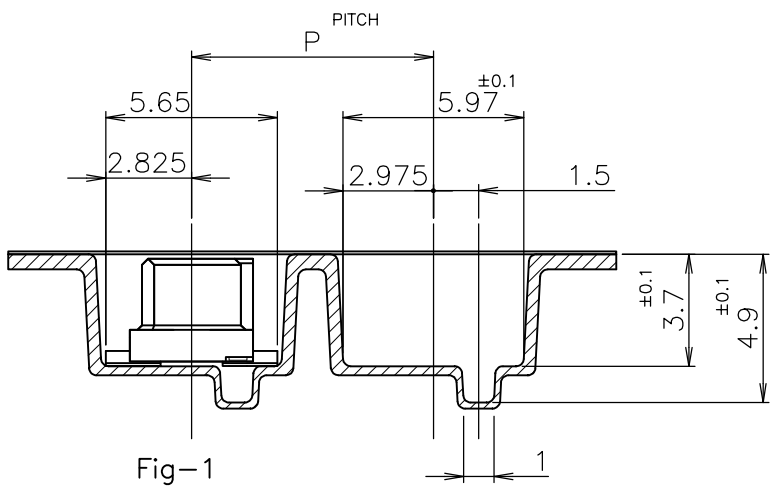

Fig-1

TOP OF REEL

NOTES;

1. PACKING SPEC : 107-5123-1

	W_2	W_1	M	P	C	?? (?) QTY/REEL	?? Pos.	??????? ? ? EMBOSS TAPE P/N	?????? (???) CONNECTOR P/N	???? ?????? TAPING P/N
OBSOLETE							20	2- -4	5- -0	5- -0
OBSOLETE							18	2- -3	4- -8	4- -8
OBSOLETE	29	26	600	12		1000	16	-9	4- -6	4- -6
							12	-8	4- -2	4- -2
							10	1-720999-1	4- -0	4- -0
OBSOLETE	21	18	300	8	16	1500	6	1-912050-3	3-174904-6	3-175630-6

(G1)

WITHOUT POLYAMIDE TAPE

THIS DRAWING IS A CONTROLLED DOCUMENT.

DIMENSIONS: mm

TOLERANCES UNLESS OTHERWISE SPECIFIED:
0 PLC ±
1 PLC ±
2 PLC ±
3 PLC ±
4 PLC ±
ANGLES ±
10以下 : ±0.2
10を超え 30以下 : ±0.25
30を超え 100以下 : ±0.3
角度 : ±3°

MATERIAL

FINISH

DWN	J.TANIGAWA	28MAY88
CHK	S.KIKUCHI	30MAY88
APVD	N.ONOUE	30MAY88
PRODUCT SPEC		
APPLICATION SPEC		
WEIGHT	0	

TE Connectivity

NAME
ON TAPING (EMBOSS)1.25 F-P CONN.
DOUBLE ROW REC HDR ASS'Y (V)
SMT WITHOUT BOSS

SIZE	CAGE CODE	DRAWING NO	RESTRICTED TO
A3	00779	C-175630	—

CUSTOMER DRAWING

SCALE	SHEET	REV
NON	1 OF 2	G1