THIS DRAWING IS UNPUBLISHED. RELEASED FOR PUBLICATION 20
© COPYRIGHT 20 BY - ALL RIGHTS RESERVED.

REVISIONS

P	LTR	DESCRIPTION	DATE	DWN	APVD
	A3	REVISED PER ECR-16-011494	30MAY2017	NK	CX

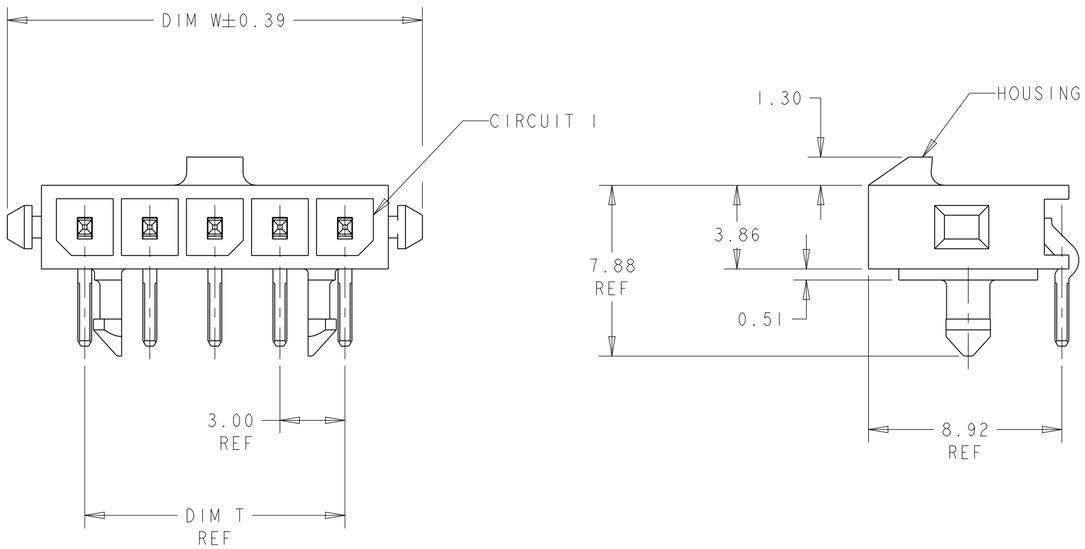

CONTACT

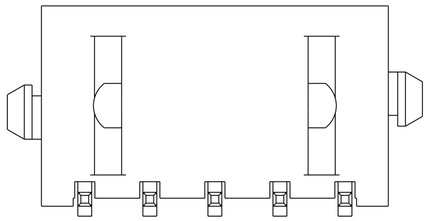

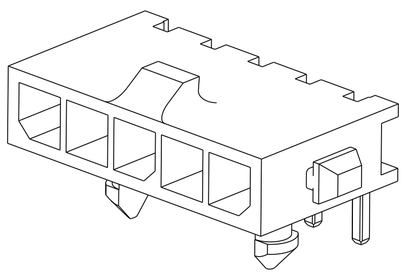

1. MATERIAL: CONTACTS - BRASS
HOUSING - UL 94V-0 RATED HIGH TEMP NYLON, COLOR BLACK.

2. PLATING: CONTACTS - 0.76µm MINIMUM GOLD ON MATING END,
2.54µm MINIMUM TIN LEAD ON SOLDER TAILS, BOTH OVER
1.27µm MINIMUM NICKEL.

3. DATUMS AND BASIC DIMENSIONS ARE ESTABLISHED BY CUSTOMER.

4. RECOMMENDED PC BOARD THICKNESS OF 1.57.

5. PLATING: CONTACTS - 0.76µm MINIMUM GOLD ON MATING END,
2.54µm MINIMUM MATTE TIN ON SOLDER TAILS, BOTH OVER
1.27µm MINIMUM NICKEL.

	FINISH	DIM Z	DIM V	DIM T	DIM W	NO. OF POSN	PART NUMBER
	5	33.00	28.70	33.00	40.14	12	3-1445098-2
	5	30.00	25.70	30.00	37.14	11	3-1445098-1
	5	27.00	22.70	27.00	34.14	10	3-1445098-0
	5	24.00	19.70	24.00	31.14	9	2-1445098-9
	5	21.00	16.70	21.00	28.14	8	2-1445098-8
	5	18.00	13.70	18.00	25.14	7	2-1445098-7
	5	15.00	10.70	15.00	22.14	6	2-1445098-6
	5	12.00	7.70	12.00	19.14	5	2-1445098-5
	5	9.00	4.70	9.00	16.14	4	2-1445098-4
	5	-	-	6.00	13.14	3	2-1445098-3
	5	-	-	3.00	10.14	2	2-1445098-2
SUPERCEDED BY 3-1445098-2	2	33.00	28.70	33.00	40.14	12	~~1-1445098-2~~
SUPERCEDED BY 3-1445098-1	2	30.00	25.70	30.00	37.14	11	~~1-1445098-1~~
SUPERCEDED BY 3-1445098-0	2	27.00	22.70	27.00	34.14	10	~~1-1445098-0~~
SUPERCEDED BY 2-1445098-9	2	24.00	19.70	24.00	31.14	9	~~1445098-9~~
SUPERCEDED BY 2-1445098-8	2	21.00	16.70	21.00	28.14	8	~~1445098-8~~
SUPERCEDED BY 2-1445098-7	2	18.00	13.70	18.00	25.14	7	~~1445098-7~~
SUPERCEDED BY 2-1445098-6	2	15.00	10.70	15.00	22.14	6	~~1445098-6~~
SUPERCEDED BY 2-1445098-5	2	12.00	7.70	12.00	19.14	5	~~1445098-5~~
SUPERCEDED BY 2-1445098-4	2	9.00	4.70	9.00	16.14	4	~~1445098-4~~
SUPERCEDED BY 2-1445098-3	2	-	-	6.00	13.14	3	~~1445098-3~~
SUPERCEDED BY 2-1445098-2	2	-	-	3.00	10.14	2	~~1445098-2~~

THIS DRAWING IS A CONTROLLED DOCUMENT.

DIMENSIONS: mm

TOLERANCES UNLESS OTHERWISE SPECIFIED:
0 PLC ±-
1 PLC ±-
2 PLC ±0.13
3 PLC ±-
4 PLC ±-
ANGLES ±-

MATERIAL 1

FINISH SEE TABLE

DWN J. ROOT 09OCT2000
CHK K. WHITAKER 17-APR-2001
APVD C. JONES 17-APR-2001
PRODUCT SPEC -
APPLICATION SPEC -
WEIGHT -

TE Connectivity

NAME RIGHT ANGLE THRU HOLE HEADER ASSY, 0.76 MIC GOLD CONTACTS, W/PLASTIC HOLDDOWNS, SGL ROW, MICRO MATE-N-LOK™

SIZE A2 | CAGE CODE 00779 | DRAWING NO C-1445098 | RESTRICTED TO -

CUSTOMER DRAWING | SCALE 5:1 | SHEET 1 OF 2 | REV A3

1471-9 (3/13)

THIS DRAWING IS UNPUBLISHED. RELEASED FOR PUBLICATION 20
© COPYRIGHT 20 BY - ALL RIGHTS RESERVED.

REVISIONS

P	LTR	DESCRIPTION	DATE	DWN	APVD
	-	SEE SHEET 1	-	-	-

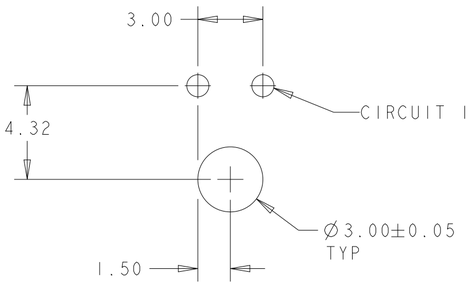

PCB LAYOUT FOR 2 POSITION 4
COMPONENT SIDE

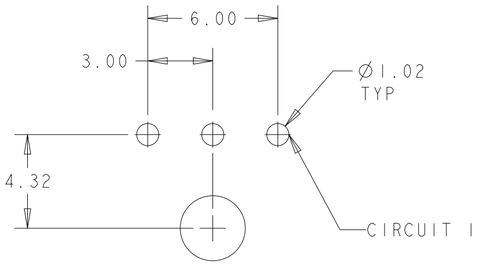

PCB LAYOUT FOR 3 POSITION 4
COMPONENT SIDE

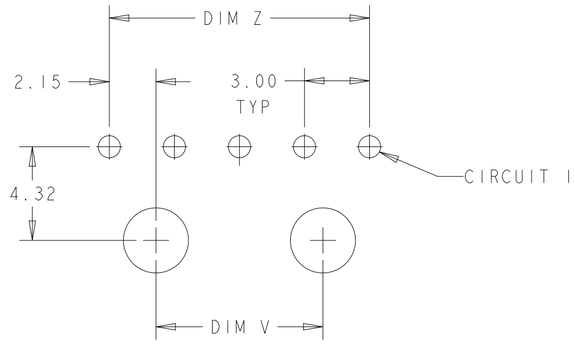

PCB LAYOUT FOR 4-12 POSITION 4
COMPONENT SIDE

THIS DRAWING IS A CONTROLLED DOCUMENT.

DIMENSIONS: mm

TOLERANCES UNLESS OTHERWISE SPECIFIED:
0 PLC ±-
1 PLC ±-
2 PLC ±0.13
3 PLC ±-
4 PLC ±-
ANGLES ±-

MATERIAL 1

FINISH SEE TABLE

DWN J. ROOT 09OCT2000
CHK K. WHITAKER 17-APR-2001
APVD C. JONES 17-APR-2001
PRODUCT SPEC -
APPLICATION SPEC -
WEIGHT -

TE Connectivity

NAME RIGHT ANGLE THRU HOLE HEADER ASSY, 0.76 MIC GOLD CONTACTS, W/PLASTIC HOLDDOWNS, SGL ROW, MICRO MATE-N-LOK

SIZE	CAGE CODE	DRAWING NO	RESTRICTED TO
A2	00779	C-1445098	-

CUSTOMER DRAWING | SCALE 5:1 | SHEET 2 OF 2 | REV A3

1471-9 (3/13)