THIS DRAWING IS UNPUBLISHED. RELEASED FOR PUBLICATION -,- .
© COPYRIGHT - By - ALL RIGHTS RESERVED.

REVISIONS

P	LTR	DESCRIPTION	DATE	DWN	APVD
	C2	REVISED PER ECO-16-018632	05APR2017	SK	PO

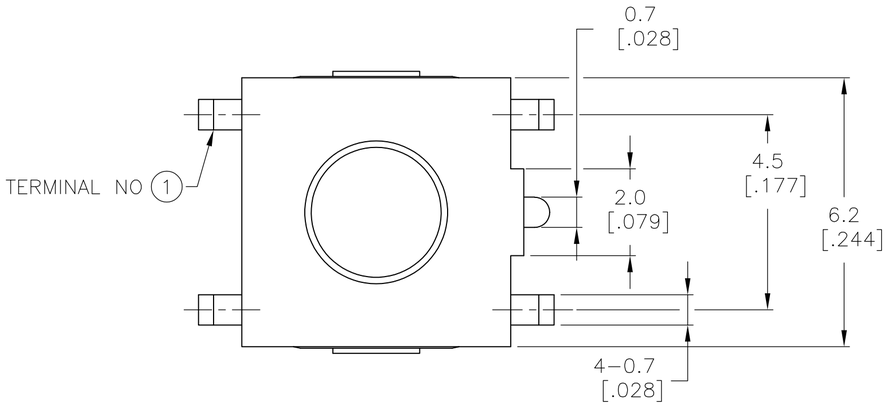

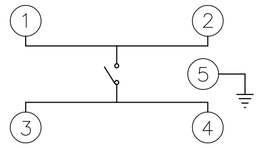

CIRCUIT DIAGRAM

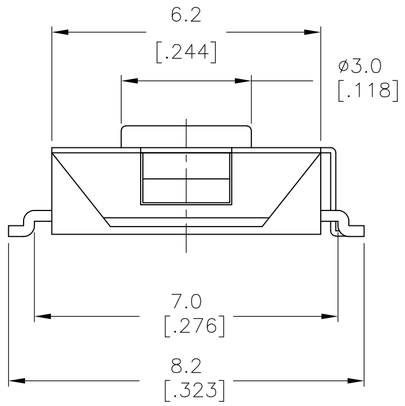

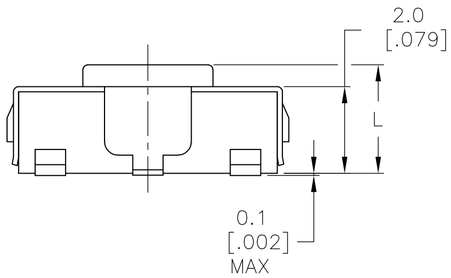

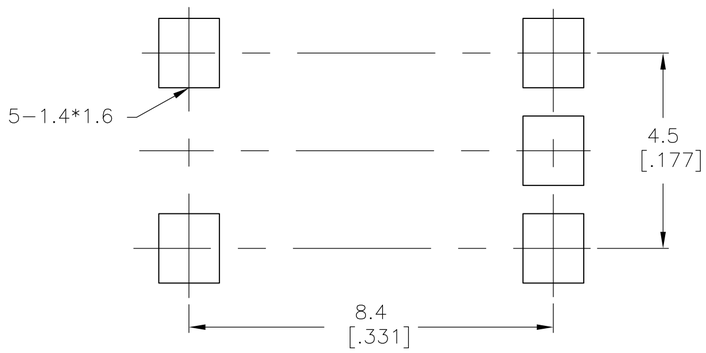

P.C.B MOUNTING SOLDER LAND DIMENSION

SPECIFICATIONS:
MATERIALS:
HOUSING, THERMOPLASTIC, UL94-V0, BLACK
ACTUATOR, THERMOPLASTIC, UL94-V0, COLOR SEE TABLE
TERMINAL, COPPER ALLOY, PLATE- SILVER OVER NICKEL
COVER, COPPER ALLOY, TIN PLATE
CONTACT, STAINLESS STEEL, SILVER PLATE

ELECTRICAL:
MAX CONTACT RATING: 50MILLIAMPS@24V DC
MIN CONTACT RATING: 10MICROAMPS@1V DC
INITIAL CONTACT RESISTANCE, 100 MILLIOHMS MAX, PER EIA-364-23B, EACH POSITION
INSULATION RESISTANCE, 100 MEGOHM MIN. PER EIA-364-21C EACH POSITION
DIELECTRIC STRENGTH, 500 V AC FOR 1 MINUTE, PER EIA-364-20B, CONDITION 1, EACH POSITION.
CONTACT BOUNCE, 10 MILLISECOND MAX, PER EIA 448-1B, METHOD 15

MECHANICAL:
ACTUATION FORCE, SEE TABLE
ACTUATION TRAVEL, .25 +/-.1mm
LIFE EXPECTANCY, SEE TABLE, VALUES GIVEN ARE MINIMUM, (2 CYCLES PER SECOND AND 150% ACTUATION FORCE), PER EIA-448 METHODS 8 & 9
VIBRATION, PER EIA 364-28D, CONDITION VII, LEVEL E, DURATION 1.5 HOURS
MECHANICAL SHOCK, PER EIA-364-27C, CONDITION A

ENVIRONMENTAL:
OPERATING TEMPERATURE, -35° TO +85°C, PER EIA-448, METHOD 10 (2 CYCLES PER SECOND)
STORAGE TEMPERATURE, -35° TO +85°C
HUMIDITY AND TEMPERATURE CYCLING PER EIA-364-31B, METHOD III
THERMAL SHOCK, PER EIA-364-32C, -35 TO +85 DEGREES C
SOLDERABILITY, PER EIA-364-52, CLASS 2, CATEGORY 1, TEMP, 245 DEGREES C MAX, TIME, 2.5
SECONDS MAX, 95% MINIMUM COVERAGE
RESISTANCE TO SOLDER HEAT, PER 109-201 COND B
1. NO CHANGE IN INITIAL ELECTRICAL AND MECHANICAL CHARACTERISTICS

NOTES:
1. TAPE AND REEL PACKAGING PER EIA 481, TAPE WIDTH 12MM, PITCH 8.0MM, 3000 PER REEL
2. ALL MATERIALS AND FINISHES SHALL COMPLY WITH EU DIRECTIVE 2002/95/EC OF27JAN2003 (ROHS)

	COLOR	PACKAGING	CYCLE LIFE	FORCE	DIM L	PART NUMBER
	VIOLET	T&R	100,000	260±50gf	2.5mm	1-1571636-0
OBSOLETE	~~VIOLET~~	~~BULK~~	~~100,000~~	~~260±50gf~~	~~2.5mm~~	~~1571636-9~~
	RED	T&R	1,000,000	160±50gf	2.0mm	1571636-8
OBSOLETE	~~RED~~	~~BULK~~	~~1,000,000~~	~~160±50gf~~	~~2.0mm~~	~~1571636-7~~
	~~RED~~	~~T&R~~	~~1,000,000~~	~~160±50gf~~	~~2.5mm~~	~~1571636-6~~
	~~RED~~	~~BULK~~	~~1,000,000~~	~~160±50gf~~	~~2.5mm~~	~~1571636-5~~
	GREEN	T&R	1,000,000	100±50gf	2.5mm	1571636-4
OBSOLETE	~~GREEN~~	~~BULK~~	~~1,000,000~~	~~100±50gf~~	~~2.5mm~~	~~1571636-3~~
	IVORY	T&R	1,000,000	50±30gf	2.5mm	1571636-2
OBSOLETE	~~IVORY~~	~~BULK~~	~~1,000,000~~	~~50±30gf~~	~~2.5mm~~	~~1571636-1~~

THIS DRAWING IS A CONTROLLED DOCUMENT.

DIMENSIONS: mm [INCHES]

TOLERANCES UNLESS OTHERWISE SPECIFIED:
0 PLC ± -
1 PLC ± 0.3
2 PLC ± -
3 PLC ± -
4 PLC ± -
ANGLES ± -

MATERIAL: SEE NOTES
FINISH: -

DWN M.BINNER 22SEP03
CHK M.SARVER 22SEP03
APVD M.SARVER 22SEP03
PRODUCT SPEC —
APPLICATION SPEC —
WEIGHT 0

TE Connectivity

NAME: PUSHBUTTON SWITCH, 6X6 mm, SMT, GULL WING, W/ESD TERMINAL
—

SIZE A2 | CAGE CODE 00779 | DRAWING NO C-1571636 | RESTRICTED TO —

CUSTOMER DRAWING | SCALE 10:1 | SHEET 1 OF 1 | REV C2

1571636