THIS DRAWING IS UNPUBLISHED. RELEASED FOR PUBLICATION 19
© COPYRIGHT 20 ALL RIGHTS RESERVED.

LOC	DIST
CM	00

REVISIONS

P	LTR	DESCRIPTION	DATE	DWN	APVD
	D	REVISED PER ECR-17-015775	02NOV2017	BDA	KR

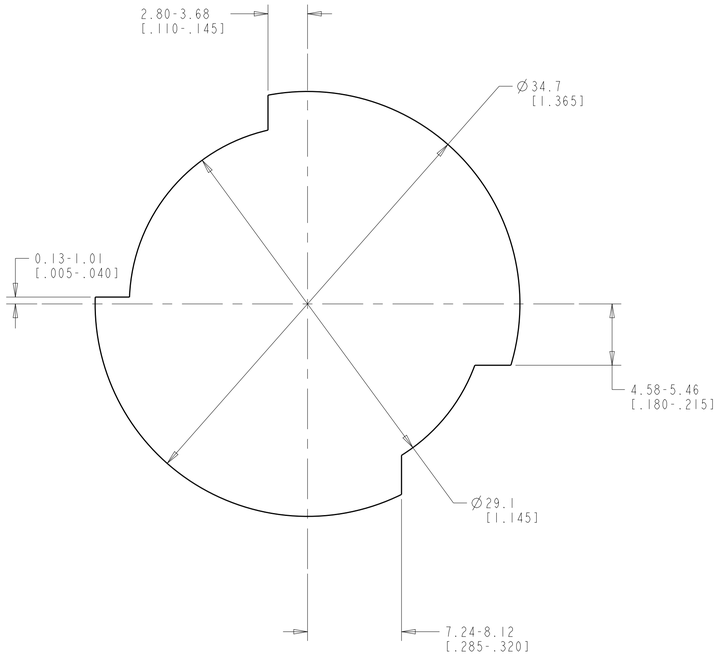

RECOMMENDED CUT OUT

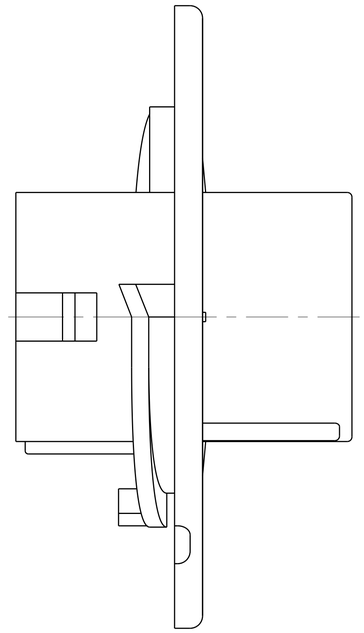

1. MATES WITH APPROPRIATE UNIVERSAL MATE-N-LOK™ PLUG.
2. RECOMMENDED PANEL THICKNESS 0.76 - 2.29 [.030 - .090].
3. PANEL MUST BE PUNCHED SO THAT THE HOUSING ENTERS THE PANEL IN THE SAME DIRECTION AS THE PUNCH.
4. DIMENSIONS SHOWN REPRESENT PRODUCT IN DRY, AS MOLDED, CONDITION.ADDITIONAL 2% GROWTH DUE TO SUBSEQUENT MOISTURE ABSORPTION MAY OCCUR AND SHOULD BE ACCOUNTED FOR.
5. FLAMMABILITY V-2 FOR THICKNESS 0.38mm, 0.75mm, 1.5mm AND 3.0mm PER IEC 60695-11-10.
6. GLOW-WIRE FLAMMABILITY (GWFI) 800°C FOR THICKNESS 0.38mm AND 0.75mm PER IEC 60695-2-12.
7. GLOW-WIRE FLAMMABILITY (GWFI) 960°C FOR THICKNESS 1.5mm AND 3.0mm PER IEC 60695-2-12.
8. GLOW-WIRE IGNITION (GWIT) 825°C FOR THICKNESS 0.38mm 0.75mm, 1.5mm, AND 3.0mm PER IEC 60695-2-13.

9 UL AND CSA LOGOS LOCATED APPROXIMATELY AS SHOWN

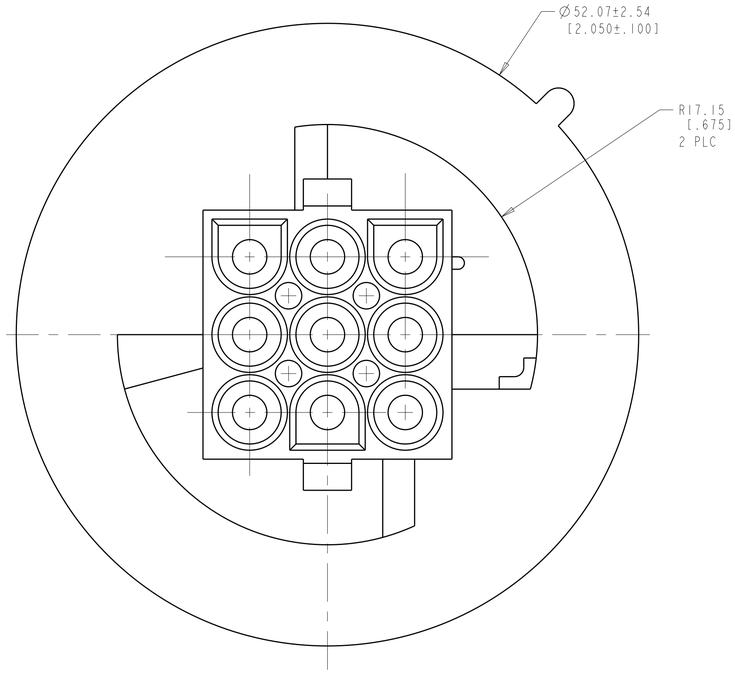

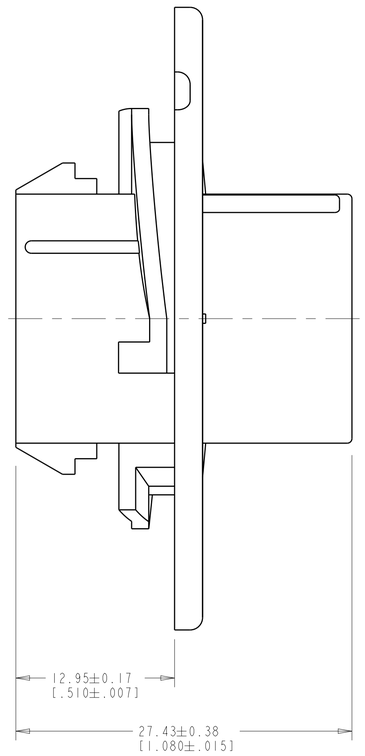

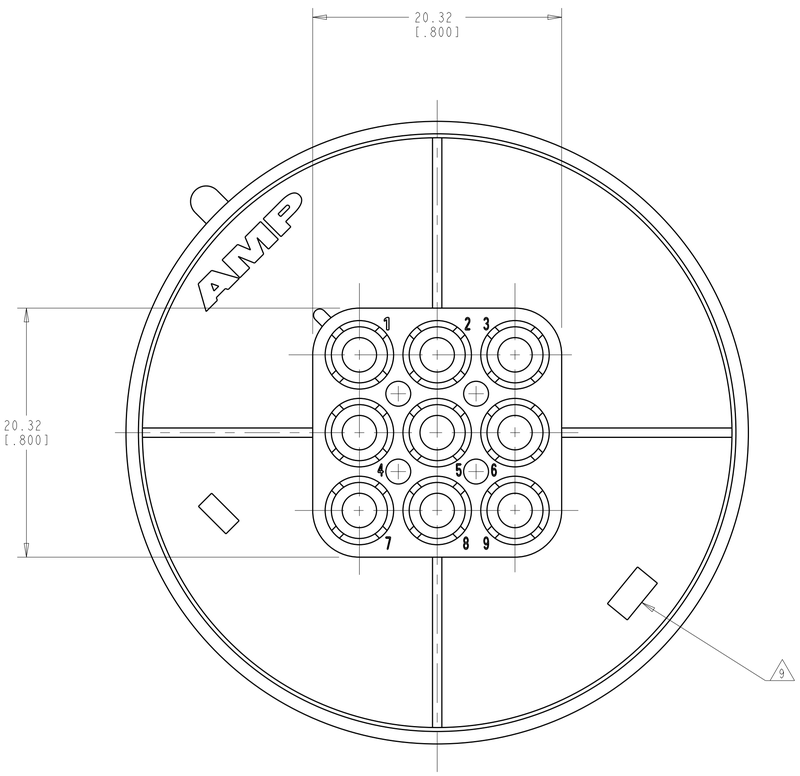

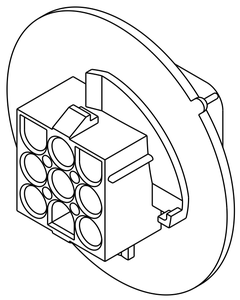

3-DIMENSIONAL MODEL
SCALE 2:1

NATURAL	1586853-1
COLOR	PART NUMBER

THIS DRAWING IS A CONTROLLED DOCUMENT.

DIMENSIONS: mm[INCHES]

TOLERANCES UNLESS OTHERWISE SPECIFIED:
0 PLC ±-
1 PLC ±-
2 PLC ±0.51[.020]
3 PLC ±-
4 PLC ±-
ANGLES ±0° 30'

MATERIAL: NYLON, UL 94V-2, NATURAL
FINISH: - / -

DWN K. WHITAKER 18JUL2007
CHK D. COLEY 18JUL2007
APVD D. COLEY 18JUL2007
PRODUCT SPEC -
APPLICATION SPEC -
WEIGHT -

TE Connectivity

NAME: CAP, 9 CIRCUIT, UNIVERSAL MATE-N-LOK(TM), SPECIAL

SIZE	CAGE CODE	DRAWING NO.	RESTRICTED TO
A1	00779	C-1586853	-

CUSTOMER DRAWING

SCALE	SHEET	OF	REV
4:1	1	1	D