THIS DRAWING IS UNPUBLISHED
RELEASED FOR PUBLICATION 2015
© COPYRIGHT 2012 BY TE CONNECTIVITY ALL RIGHTS RESERVED.

LOC	DIST

REVISIONS

P	LTR	DESCRIPTION	DATE	DWN	APVD
	NC	NEW RELEASE PER E.O. P21414	24AUG2012	IG	DM
	A	REVISED PER ECO-14-019072	23FEB2015	JA	DM

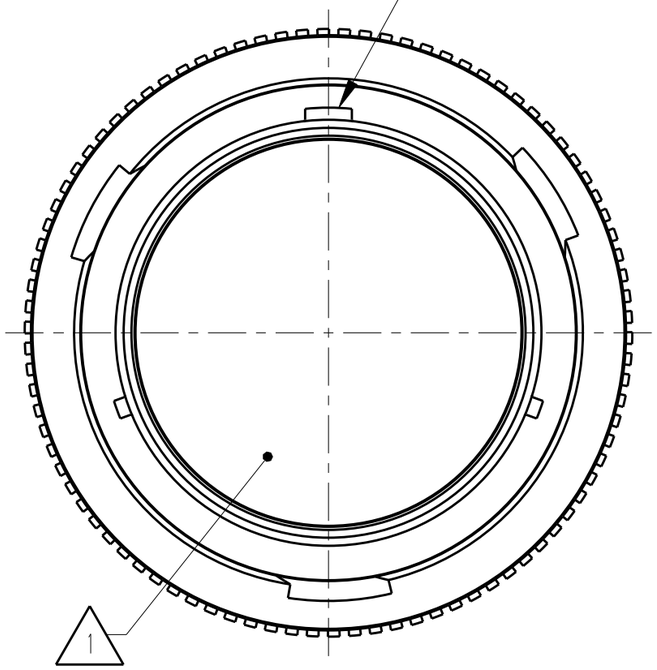

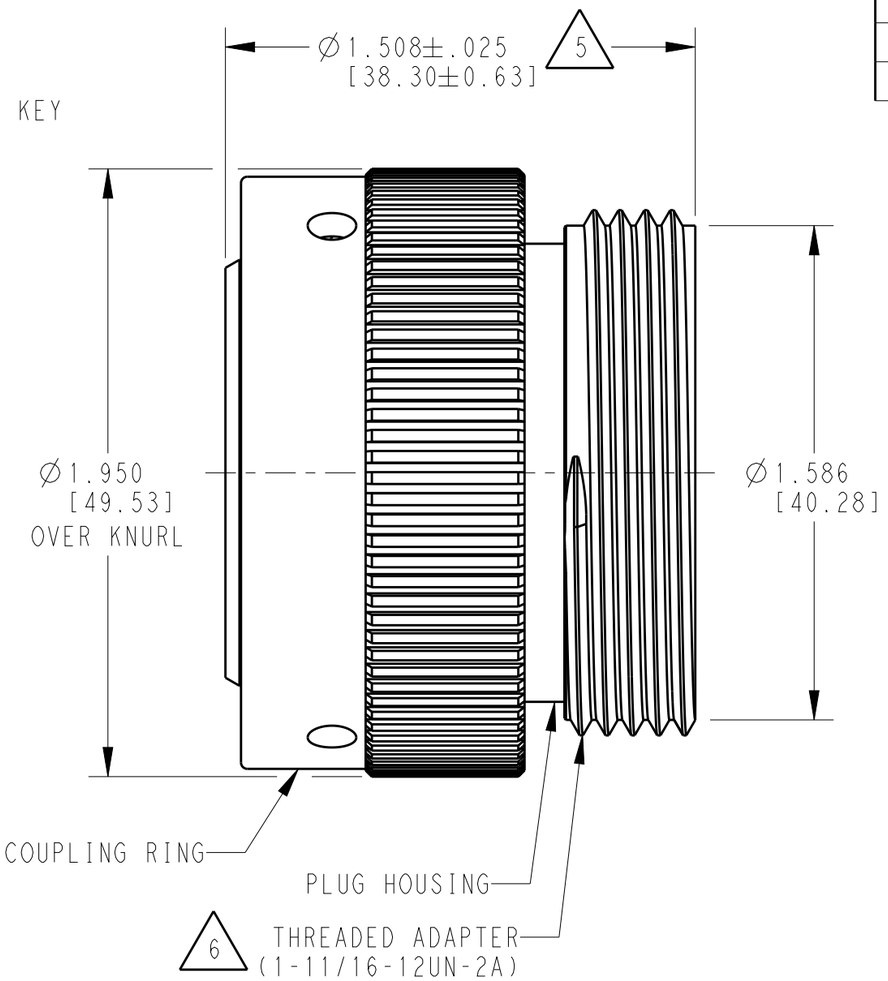

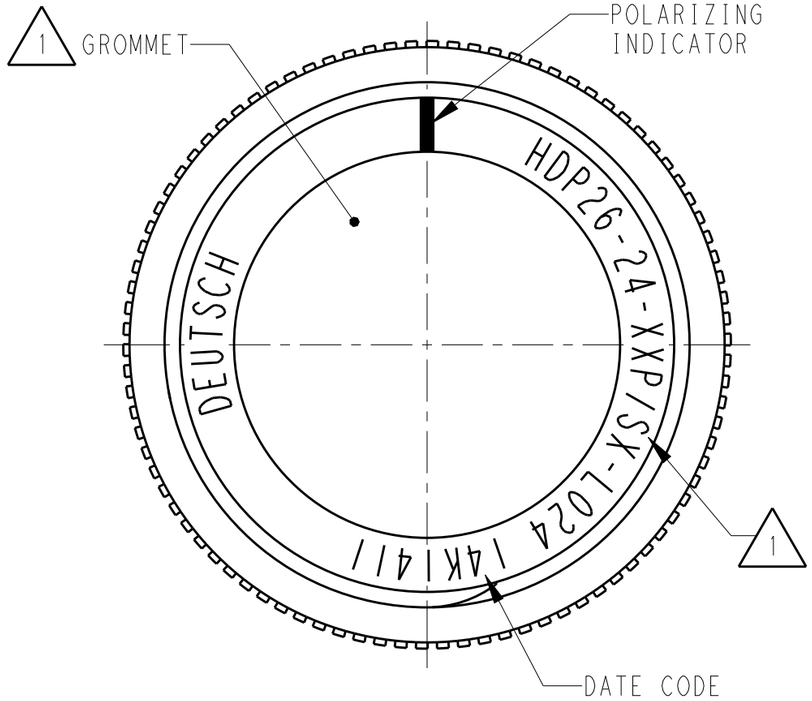

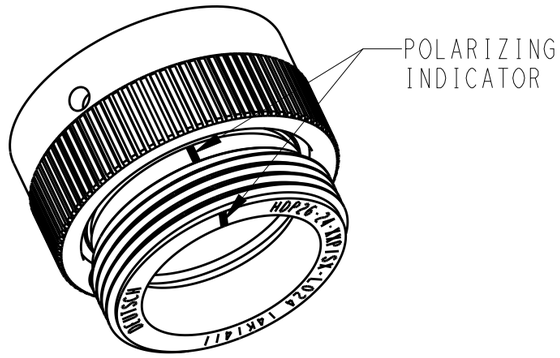

SCALE 1:1

5 NOTED DIMENSION DOES NOT INCLUDE GROMMET PROTRUSION.

4 MATERIAL: PLUG HOUSING/COUPLING RING: PA66 GF10 (BLACK)
THREADED ADAPTER: PA66 GF10 (GREEN, GRAY, BLUE)
GROMMET: SILICONE (ORANGE-RED)

3 SEE 0425-021-0000 APPLICATION SPECIFICATION
A. RECOMMENDED WIRE INSULATION RANGE
B. CONTACT REMOVAL TOOLS

2. THIS PLUG MATES WITH HDP24-24XXP/SX-XXXX RECEPTACLE
X = SEAL TYPE (N,T,E)
XX = INSERT ARRANGEMENT
XXXX = MODIFICATION

1 SEE CUSTOMER DRAWING 0425-014-2400 FOR AVAILABLE INSERT ARRANGEMENTS AND PART NUMBERS.

NOTES:

6 PART MODIFICATION: THREADED ADAPTER
ACCEPT BACKSHELL 2428-024-2405

THIS DRAWING IS A CONTROLLED DOCUMENT.

DIMENSIONS: INCHES[mm]

TOLERANCES UNLESS OTHERWISE SPECIFIED:
0 PLC ±
1 PLC ±
2 PLC ±
3 PLC ±.015 [0.38]
4 PLC ±
ANGLES ±0°30'0"

MATERIAL 4

FINISH N/A

DWN 13JUL2012 ILINA GRANTCHAROVA
CHK 23AUG2012 ILINA GRANTCHAROVA
APVD 24AUG2014 DAVID MEYER
PRODUCT SPEC 0425-021-0000
APPLICATION SPEC 3
WEIGHT

Customer Drawing

TE Connectivity

NAME PLUG, COUPLING RING
SIZE 24, -L024 MOD
HDP SERIES

SIZE	CAGE CODE	DRAWING NO	RESTRICTED TO
A3	4AFU8	C-HDP26-24-XXP/SX-L024	-

SCALE 2:1 SHEET 1 OF 1 REV A

1470-19 (3/11)