THIS DRAWING IS UNPUBLISHED. RELEASED FOR PUBLICATION -
© COPYRIGHT copyright_dgYr- ALL RIGHTS RESERVED.

REVISIONS

P	LTR	DESCRIPTION	DATE	DWN	APVD
	C	REDRAWN/REVISED PER ECO-17-001745	20NOV2017	KS	JO

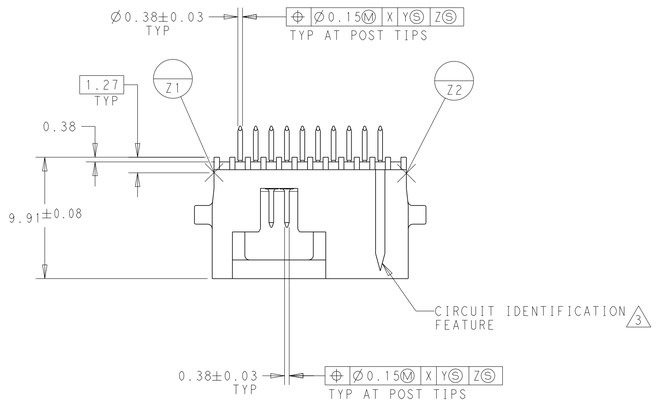

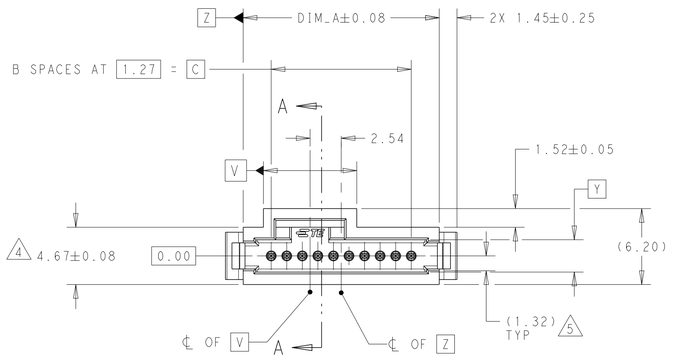

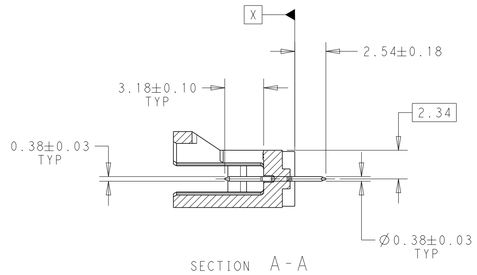

1. CONTACT AREAS PLATED WITH 0.76µm GOLD, SOLDER TAILS PLATED WITH 3.81µm TIN-LEAD, ALL OVER 1.27µm NICKEL
2. NOTE DELETED.
3. CIRCUIT IDENTIFICATION FEATURE OMITTED ON 4,5,6,& 7 POSITION HEADER ASSEMBLIES
4. DIMENSIONS APPLIES AT BASE OF SHROUD
5. THE NOTED DIMENSIONS APPLY AT THE INTERSECTION OF THE POST & HOUSING.
6. NOTE DELETED.
7. ASSEMBLY MATES WITH FFC CONNECTORS 487973.
8. CONTACT AREAS PLATED WITH 0.76µm GOLD, SOLDER TAILS PLATED WITH 3.81µm TIN, ALL OVER 1.27µm NICKEL
9. MATERIAL- HOUSING:LCP, COLOR:BLACK
   CONTACT:COPPER ALLOY

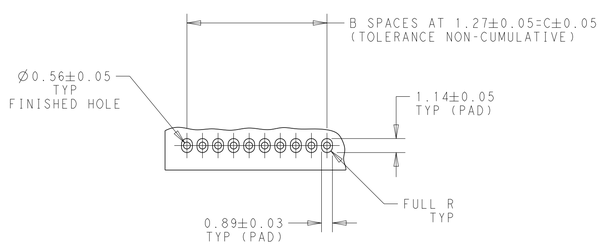

RECOMMENDED HOLE PATTERN

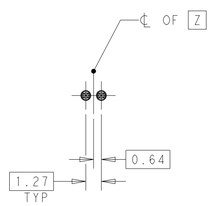

BASIC DIMENSION FOR ODD NO OF SPACES (SEE TABLE)

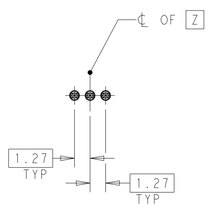

BASIC DIMENSION FOR EVEN NO OF SPACES (SEE TABLE)

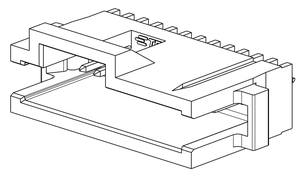

SCALE 5:1

11.43	9	16.00	10	8 5-146069-1
11.43	9	16.00	10	1 146069-1
DIM_C	B SPACES	DIM_A	NO OF POSN	PART NUMBER

THIS DRAWING IS A CONTROLLED DOCUMENT.

DIMENSIONS: mm

TOLERANCES UNLESS OTHERWISE SPECIFIED:
0 PLC ±-
1 PLC ±0.3
2 PLC ±0.13
3 PLC ±-
4 PLC ±-
ANGLES ±0.5°

MATERIAL 9

FINISH SEE TABLE

DWN K.SHRISHAIL 20NOV2017
CHK J.OLSON 20NOV2017
APVD J.OLSON 20NOV2017
PRODUCT SPEC 108-1093
APPLICATION SPEC 114-25031
WEIGHT -

TE Connectivity

NAME HEADER ASSEMBLY, VERTICAL, SINGLE ROW OFFSET SIDE LATCH & END LATCHES, AMPMODU SYSTEM 50

SIZE A1 | CAGE CODE 00779 | DRAWING NO C-146069 | RESTRICTED TO -

CUSTOMER DRAWING | SCALE 4:1 | SHEET 1 OF 1 | REV C

4805 (3/13)