SIGN	DATE	DESCRIPTION	APPROVER
1	04.20'09	The design is changed	Jacke
2	04.20'09	The operating temperature is changed	Jacke
3	2010.01.12	Add cULus standard	Jacke
4	2010.03.31	Add the 2p mark	Jacke

THIS IS CAD DRAWING, DO NOT REVISE MANUALLY!!!

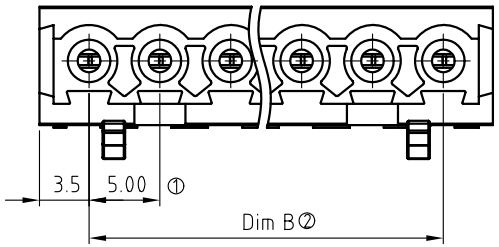

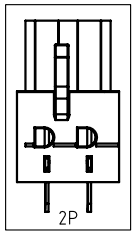

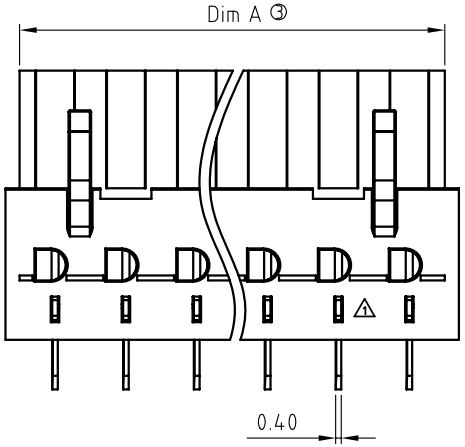

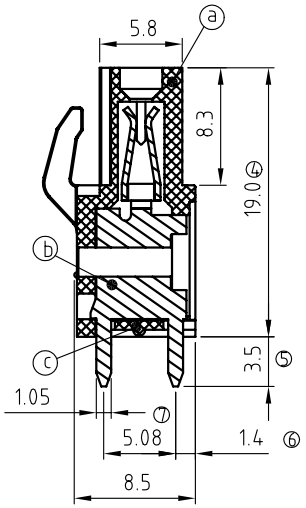

Materials

Item a Terminal body:Thermoplastic (UL94V-0)

Item b Female contact:PhBz(CuSn), Tin plated

Item c Terminal cover:Thermoplastic (UL94V-0)

Electrical cULus

- Voltage rating: 300VAC
- Current rating: 10A
- Withstanding Voltage: 1.6kv
- 2 Operating temperature: -40°C to +115°C
- Soldering temperature: 250°C±10°C/5 Sec
- 3 Safety Approval: c UL us

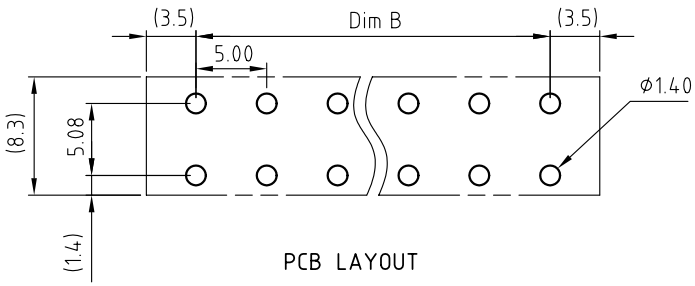

PCB LAYOUT

V7 xx 7 1 x 0 xxxx G

No. OF POLES
02 2 CONTACTS
03 3 CONTACTS
... ...
24 24 CONTACTS

Color
0 Black (RAL9005)
2 Red (RAL3001/D)
3 Orange(RAL2011/P)
4 Yellow(RAL1018/A)
5 Green(RAL6018/T)
6 Blue (RAL5015/A)
8 Grey(RAL7035/D)

G: Pb<40000ppm

0000: "@" Logo (Standard)
000A: "ANYTEK" Mark
Any special item by customer requst. please contact sales department.

Poles	02	03	04	05	06	07	08	09	10	11	12	13
Dim A	10	15	20	25	30	35	40	45	50	55	60	65
Dim B	5	10	15	20	25	30	35	40	45	50	55	60
TOL	±0.10				±0.15					±0.20		
Poles	14	15	16	17	18	19	20	21	22	23	24	
Dim A	70	75	80	85	90	95	100	105	110	115	120	
Dim B	65	70	75	80	85	90	95	100	105	110	115	
TOL	±0.20		±0.25					±0.30				

ANYTEK

INSPECTION COPY

ALL RIGHTS RESERVED. REPRODUCTION OR ISSUE TO THIRD PARTIES IN ANY FORM WHATEVER IS NOT PERMITTED WITHOUT WRITTEN AUTHORITY FROM THE PROPRIETOR. PROPERTY OF ANYTEK TECHNOLOGY CO., LTD

TITLE	V7 5.0 Series Vertical				
PART NO.	V7xx71x0xxxxG			DWG NO.	8V70202
APPROVED	CHECKED	DESIGNED	DRAWN	CUST NO.	
		Jacke 2010.03.31	Jacke 2010.01.12	UNIT: mm / SCALE: NONE / SHEET: 01/01 / REV.: E	

Tolerance: X. ±0.5; X.X ±0.3; X.XX ±0.1; X° ±1°