THIS DRAWING IS UNPUBLISHED. RELEASED FOR PUBLICATION –,– .
© COPYRIGHT – By – ALL RIGHTS RESERVED.

| LOC | DIST |
|---|---|
| FT | 0 |

REVISIONS

| P | LTR | DESCRIPTION | DATE | DWN | APVD |
|---|---|---|---|---|---|
| | P3 | REVISED PER ECO–11–004587 | 11MAR11 | RK | HMR |

1 PARTS PACKAGED UNASSEMBLED.

2 CABLE CLAMPING AREA ADJUSTABLE FROM .100 TO .410 SQ IN BY REVERSING CLAMPING INSERTS. (2 INSERTS SUPPLIED, –1 AND –2 ONLY)

3 CABLE CLAMPING AREA ADJUSTABLE FROM .100 TO .410 SQ IN BY CHANGING CLAMPING INSERTS. (4 INSERTS SUPPLIED, –4 ONLY)

4 .703 MAXIMUM CABLE OUTSIDE DIAMETER.

5 BULK PACKAGED KITS TO BE ORDERED IN MULTIPLES OF 100 ONLY.

6 NON–HEXAVALENT CHROMATE FINISH.

7 OBSOLETE PARTS: OBSOLETE CIS STREAMLINING PER D.RENAUD/D.SINISI

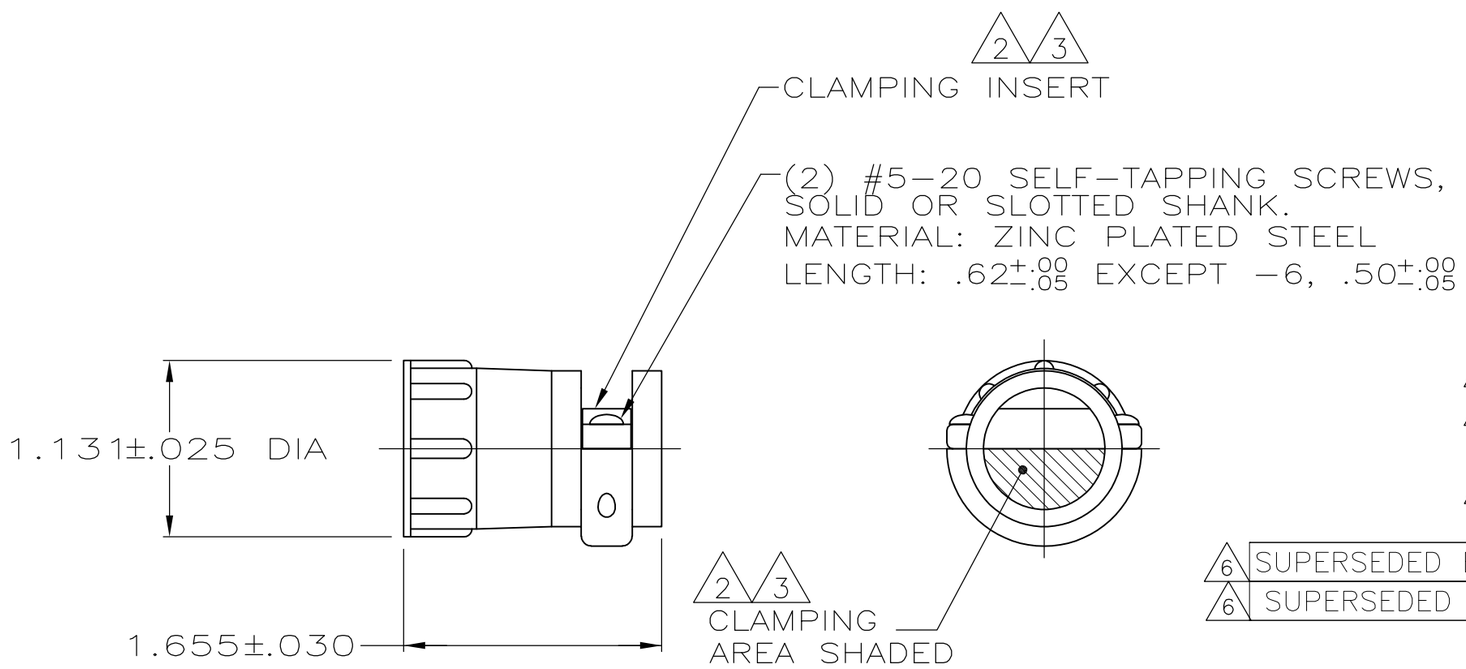


| | PACKAGING | PART NUMBER |
|---|---|---|
| 6 | INDIVIDUAL | 1–206322–1 |
| 6 | 5 BULK | 1–206322–0 |
| 6 | INDIVIDUAL | 206322–9 |
| 6 7 OBSOLETE | ~~SMALL PACK~~ | ~~206322–8~~ |
| 6 7 OBSOLETE | ~~INDIVIDUAL~~ | ~~206322–7~~ |
| 6 | 5 BULK | 206322–6 |
| 7 6 OBSOLETE | ~~SMALL PACK~~ | ~~206322–5~~ |
| OBSOLETE | ~~INDIVIDUAL~~ | ~~206322–4~~ |
| 6 SUPERSEDED BY 1–206322–0 | 5 BULK | 206322–2 |
| 6 SUPERSEDED BY 206322–9 | INDIVIDUAL | 206322–1 |

THIS DRAWING IS A CONTROLLED DOCUMENT.

DIMENSIONS: INCHES

TOLERANCES UNLESS OTHERWISE SPECIFIED:
0 PLC ± –
1 PLC ± –
2 PLC ± –
3 PLC ± –
4 PLC ± –
ANGLES ± –

MATERIAL: THERMOPLASTIC
FINISH: –

DWN A GRAFF 4/23/91
CHK W.G.LENKER 7–22–92
APVD – –
PRODUCT SPEC 108–10024
APPLICATION SPEC –
WEIGHT –

TE Connectivity

NAME: CABLE CLAMP KIT, LARGE, SHELL SIZE 17, CPC

| SIZE | CAGE CODE | DRAWING NO | RESTRICTED TO |
|---|---|---|---|
| A3 | 00779 | C–206322 | – |

CUSTOMER DRAWING | SCALE NTS | SHEET 1 OF 1 | REV P3

1470–19 (3/11)