SIGN	DATE	DESCRIPTION	APPROVER
1	10/26'09	Wire guard solder pin is Changed from Brass to Copper	Aaron
2	11/09'10	Add is " VDE "	Aaron
3			

THIS IS CAD DRAWING, DO NOT REVISE MANUALLY!!!

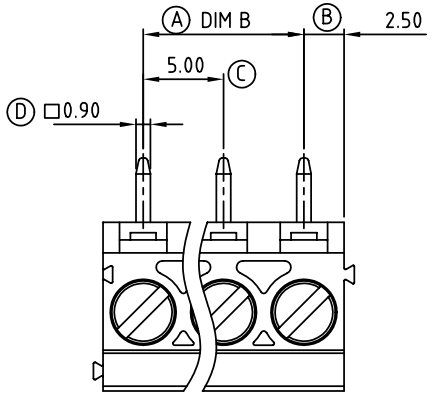

Dimension A&B

DIM A	N×5.0
DIM B	(N-1)×5.0

N=Number of contacts

Poles	A&B Tolerance
4P-8P	±0.15
9P-14P	±0.25
15P-20P	±0.35
21P-24P	±0.40

Material:

- Item 1 Terminal housing:Thermoplastic (UL 94V-0)
- Item 2 Clamp: Brass Ni plated
- 1 Item 3 Wire guard solder pin:Copper Tin plated
- Item 4 Terminal screw: Steel Zinc plating"-"slot type

2 Electrical cULus VDE

- Voltage rating: 300VAC 450V
- Current rating: 20A 24A
- Wire range : 0.2-2.5mm²
- Solid wire(AWG): 12-30
- Stranded wire(AWG): 12-30
- Torque(Lb-In): 3.5 0.5 N.m
- Screw: M3
- Wire strip length: 6-7mm
- Withstanding Voltage: 1.6KV 2.5KV
- Operating temperature: -40°C to +115°C
- Soldering temperature: 250°C±10°C/5 Sec
- Safety Approval: c UL us VDE

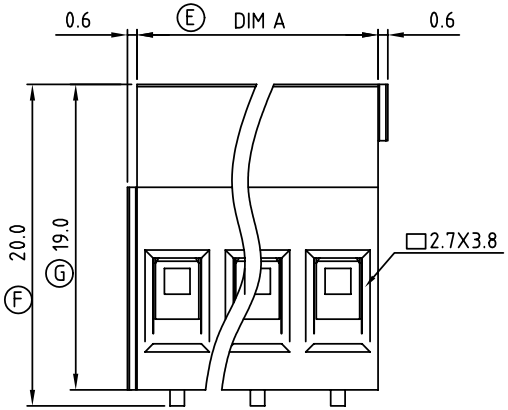

N=Number of contacts

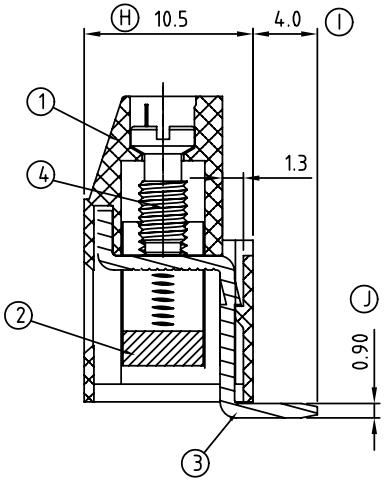

VJ xx 01 x 3 xxxx G

No. of poles

04	4 CONTACTS
05	5 CONTACTS
...	...
24	24 CONTACTS

0	Black (RAL9005)
2	Red (RAL3001/D)
3	Orange(RAL2011/P)
4	Yellow(RAL1018/A)
5	Green(RAL6018/T)
6	Blue (RAL5015/A)
8	Grey(RAL7035/D)

RoHS
Pb<40,000ppm

0000:"@"Logo (Standard)
000A:"ANYTEK"Logo
Any special item by customer request, please contact sales department.

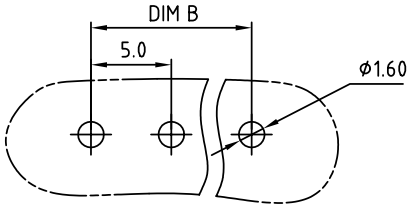

P.C.B LAYOUT

ANYTEK

CUSTOMER COPY

ALL RIGHTS RESERVED. REPRODUCTION OR ISSUE TO THIRD PARTIES IN ANY FORM WHATEVER IS NOT PERMITTED WITHOUT WRITTEN AUTHORITY FROM THE PROPRIETOR. PROPERTY OF ANYTEK TECHNOLOGY CO., LTD

TITLE	VJ-5.0 Series 4P-24P Vertical solid block (90D wire inlet)				
PART NO.	VJxx01x3xxxxG			DWG NO.	8VJ0044
APPROVED	CHECKED	DESIGNED	DRAWN	CUST NO.	
		Aaron 2010.11.09	Aaron 2009.09.09	UNIT: mm	SCALE: NONE
				SHEET: 01/01	REV.: D

Tolerance	
X.	±0.50
X.X	±0.30
X.XX	±0.10
X°	±1°