MICRO SWITCH
a Honeywell Division
FED. MFG. CODE 91929

SWITCH ENCLOSED

CATALOG LISTING
ML-1409

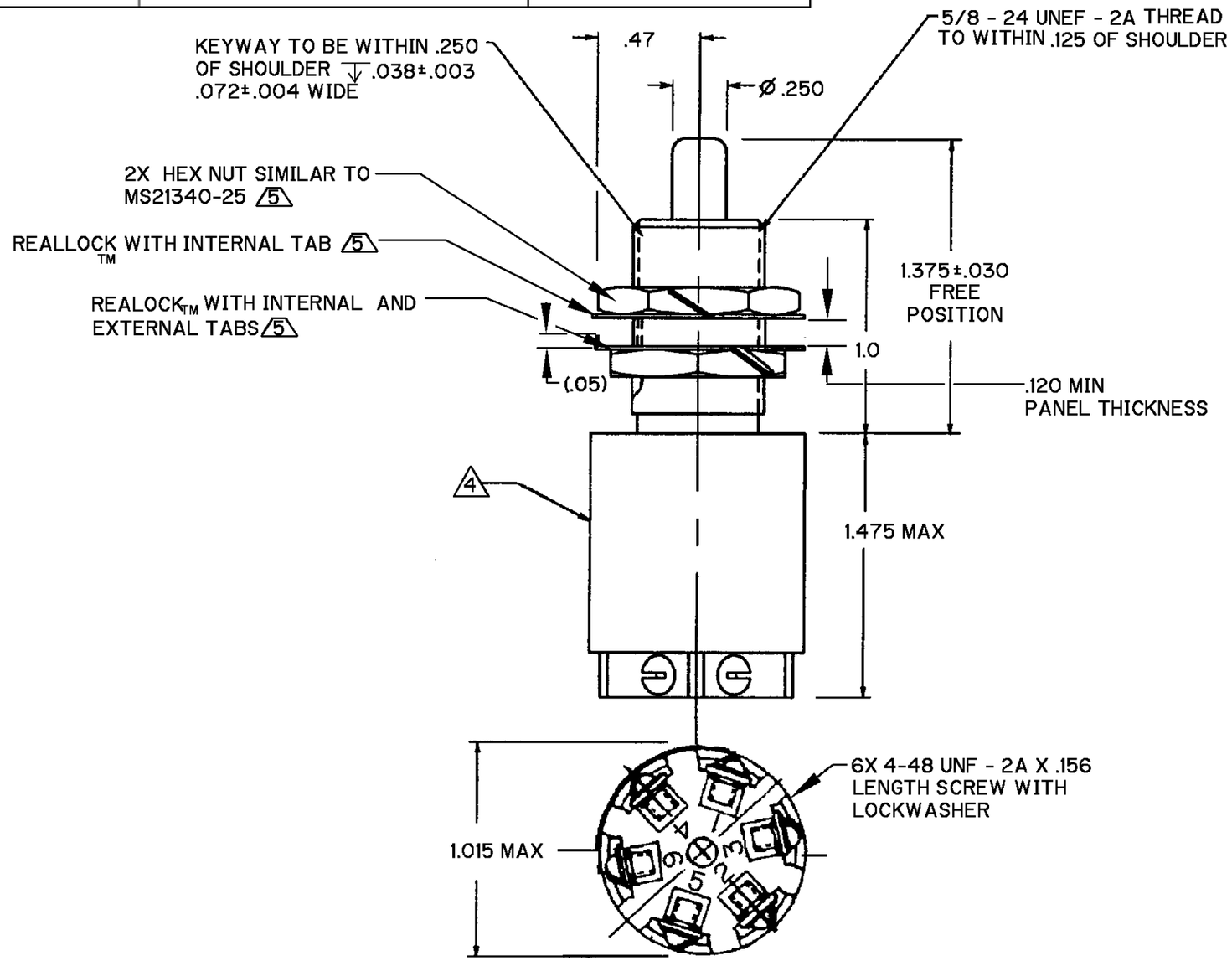

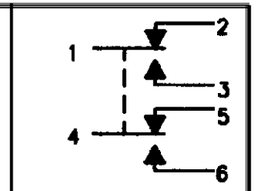

CIRCUIT DIAGRAM

NOTES
1 - COINCIDENCE OF OPERATING POINTS: CIRCUIT 1,2,3 TO CLOSE .005 MIN BEFORE CIRCUIT 4,5,6
2 - CORROSION RESISTANT STEEL ENCLOSURE, BUSHING AND PLUNGER
3 - SWITCH SEALED PER MIL - PRF - 8805 SYMBOL 4
4 PRINT CIRCUIT DIAGRAM, CATALOG LISTING AND DATE CODE ON NAME PLATE
5 HARDWARE FURNISHED UNASSEMBLED PER MIL - PRF - 8805

THIS DRAWING COVERS A PROPRIETARY ITEM AND IS THE PROPERTY OF MICRO SWITCH. A DIVISION OF HONEYWELL. THIS DRAWING IS NOT TO BE COPIED OR USED WITHOUT THE APPROVAL OF MICRO SWITCH

THIRD ANGLE PROJECTION

SCALE 2 : 1

DO NOT SCALE PRINT

UNLESS OTHERWISE SPECIFIED TOLERANCES ARE

ONE PLACE	(.0)	±.030
TWO PLACE	(.00)	±.015
THREE PLACE	(.000)	±.005
ANGLES		± 4°

WEIGHT

CHARACTERISTICS

OPERATING FORCE - - - - - - 6 - 12 LBS
FULL OVERTRAVEL FORCE - - - 30 LBS MAX
RELEASE FORCE - - - - - - - 4 LBS MIN
PRETRAVEL - - - - - - - - - .040 MAX
DIFFERENTIAL TRAVEL - - - .020 MAX
OVERTRAVEL - - - - - - - - .250 MIN

ELECTRICAL DATA

CONTACT ARRANGEMENT 2X SPDT SILVER

LOAD (AMPS)	28 VDC SEA LEVEL	28 VDC 50,000 FT.
RES	7	7
IND	4	2.5
MOTOR	4	

FORMTEK	DRAWN G J W	24 SEP 99	CHECK
			CHECK
		24 SEP 99	S A V
			CHECK
			CHECK
			CHECK
			REPLACES

REVISIONS

ISSUE 1 | CATALOG LISTING ML-1409 | PAGE 1 OF 1 | RELEASE NO. PR-24175