THIS DRAWING IS UNPUBLISHED. RELEASED FOR PUBLICATION -,- .
© COPYRIGHT - BY TYCO ELECTRONICS CORPORATION. ALL RIGHTS RESERVED.

LOC	DIST
AJ	00

REVISIONS

P	LTR	DESCRIPTION	DATE	DWN	APVD
	K1	REV PER ECO 06-029805	2/6/2007	DW	JL

1. USE WITH COMMERCIAL HAND TOOL: 220190-1
2. MAXIMUM PANEL THICKNESS: 6.10 [.240]
3. SEE I.S. 9051
4. SEE SEPERATE RESTRICTED CUSTOMER DRAWING WITH THIS PART NUMBER
5. CONSISTS OF (8) UNASSEMBLED CONNECTORS

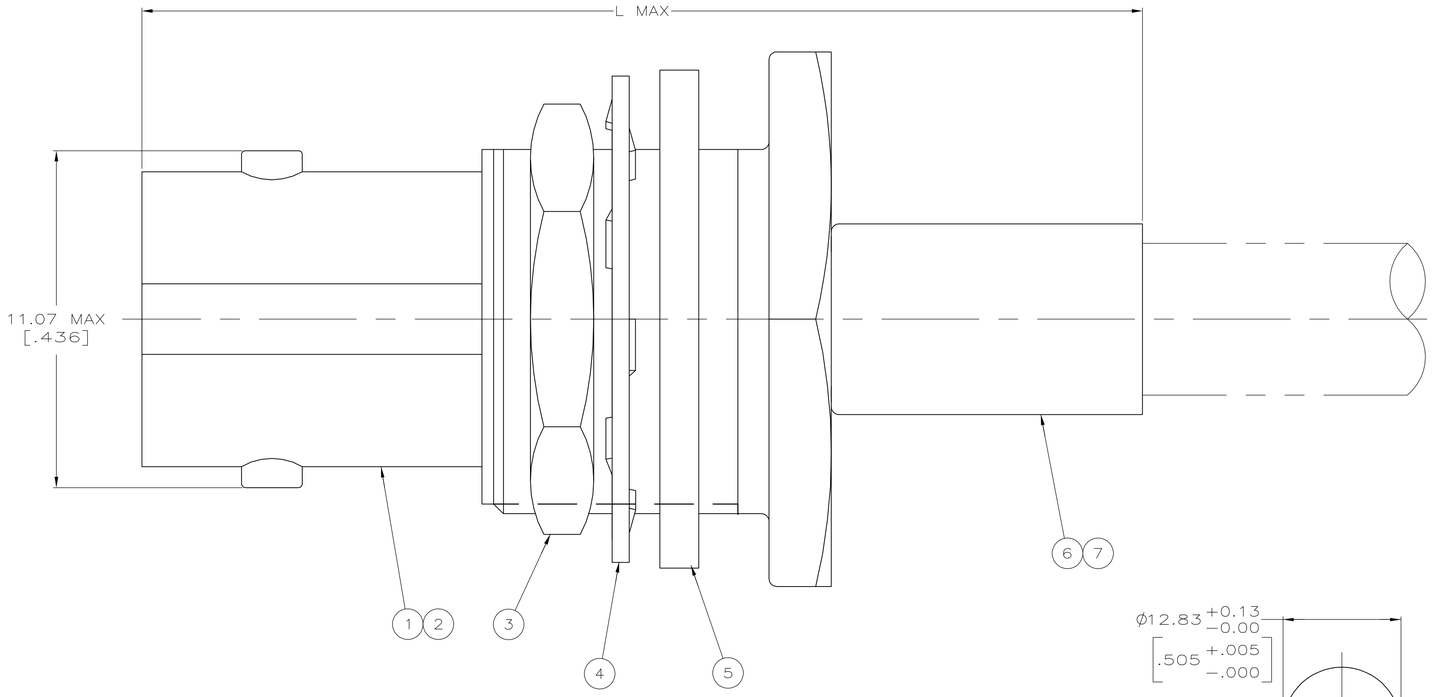

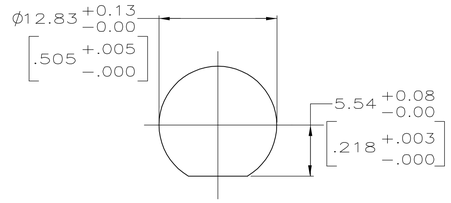

RECOMMENDED PANEL CUTOUT
SCALE: 3:1

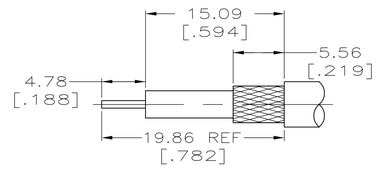

RECOMMENDED STRIP LENGTH
SCALE: 3:1

OBSOLETE	RG-58/U, 58A/U, 58B/U, 58C/U, 141/U, 141A/U	34.93 [1.375]	220189-1	220187-1	–	9-50427-1	329633	1-329632-2	1-329631-2	221149-6	227461-2	9-228980-0
4	–	–	–	–	–	–	–	–	–	–	–	1-228980-7
SUPERSEDED BY 413771-6	BELDEN 89907	40.46 [1.593]	220189-1	220187-1	–	9-228783-0	329633	1-329632-2	1-329631-2	2-221149-6	227461-2	1-228980-6
OBSOLETE	BELDEN 9907	34.93 [1.375]	220189-1	220187-1	–	9-50427-1	329633	1-329632-2	1-329631-2	2-221149-6	227461-2	1-228980-5
SUPERSEDED BY 1-228980-6 5	BELDEN 9907	34.93 [1.375]	220189-1	220187-1	–	9-50427-1	329633	1-329632-2	1-329631-2	2-221149-6	227461-2	1-228980-3
OBSOLETE	BELDEN 8281	40.64 [1.600]	220189-6	–	–	9-331256-0	329633	1-329632-2	1-329631-2	221149-6	227461-4	228980-8
	RG-174/U, 188/U, 316/U	34.93 [1.375]	220210-1	220009-5	21427-4	9-328666-0	329633	1-329632-2	1-329631-2	2-221149-0	227461-1	228980-7
	RG-59/U, 59A/U, 59B/U, 62/U, 62A/U, 62B/U	34.93 [1.375]	220189-2	220187-2	–	9-50428-0	329633	1-329632-2	1-329631-2	1-221149-3	227461-3	228980-6
	RG-58/U, 58A/U, 58B/U, 58C/U, 141/U, 141A/U	34.93 [1.375]	220189-1	220187-1	–	9-50427-1	329633	1-329632-2	1-329631-2	221149-6	227461-2	228980-5
	FOR USE WITH CABLE	L	DIE SET 1	CRIMP TOOLING	7 BUSHING QTY=1	6 FERRULE QTY=1	5 GASKET QTY=1	4 LOCKWASHER QTY=1	3 JAM NUT QTY=1	2 CONTACT QTY=1	1 JACK ASSEMBLY QTY=1	PART NUMBER

THIS DRAWING IS A CONTROLLED DOCUMENT.

DIMENSIONS: mm [INCHES]

TOLERANCES UNLESS OTHERWISE SPECIFIED:
0 PLC ± –
1 PLC ± –
2 PLC ± 0.41 [.016]
3 PLC ± –
4 PLC ± –
ANGLES ± –

MATERIAL –
FINISH –

DWN M. E. COWHER 3-8-91
CHK J. T. LIPPERT 3-12-91
APVD M. PHILLIPS 3-12-91
PRODUCT SPEC 108-12047
APPLICATION SPEC –
WEIGHT –

tyco Electronics
Tyco Electronics Corporation
Harrisburg, PA 17105-3608

NAME JACK, BHD, COMMERCIAL, BNC

SIZE	CAGE CODE	DRAWING NO	RESTRICTED TO
A1	00779	C-228980	–

CUSTOMER DRAWING
SCALE 10:1 SHEET 1 OF 1 REV K1